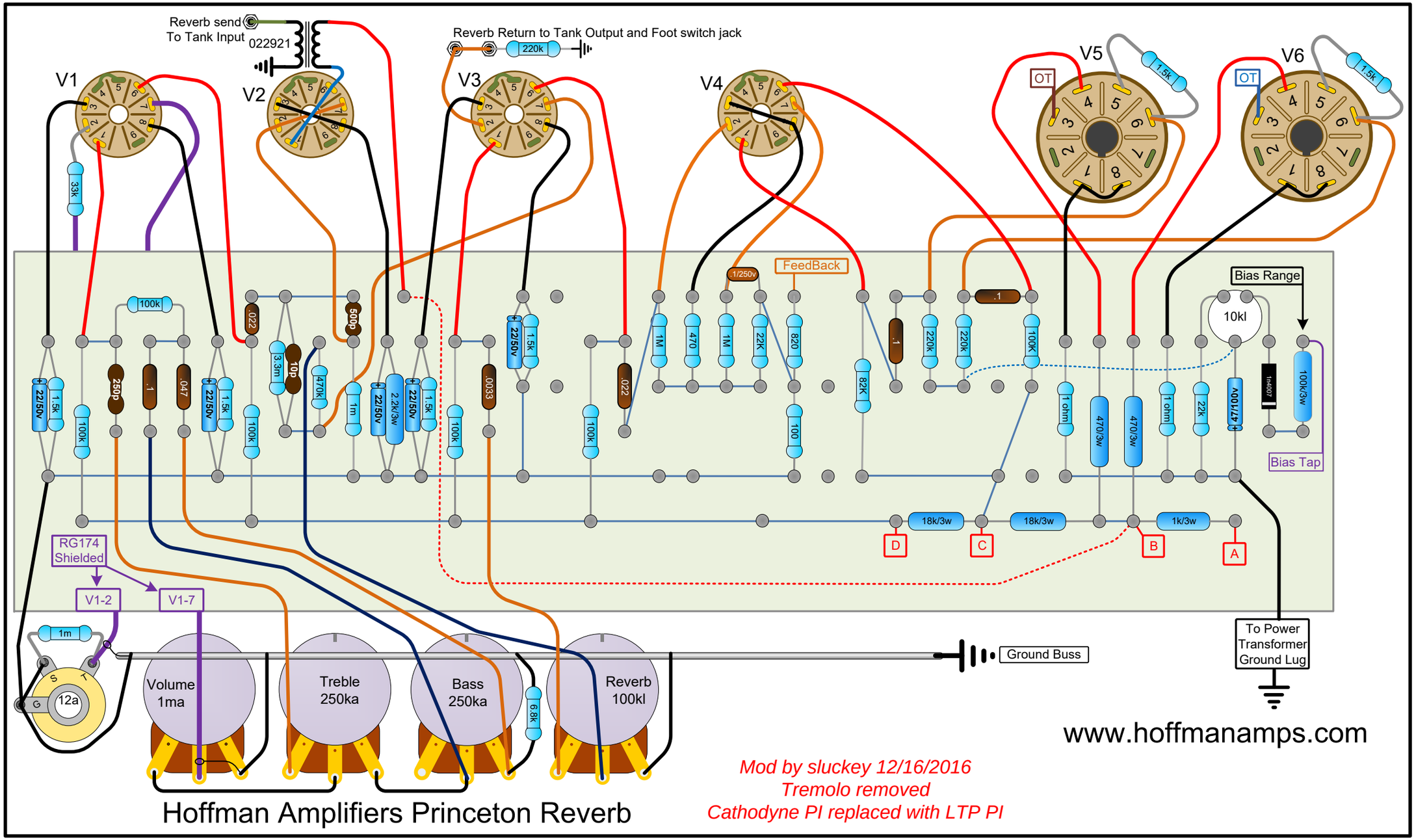
Reverb send
To Tank Input
022921
Reverb Return to Tank Output and Foot switch jack
220k
V1
V2
V3
V4
V5
V6
OT
OT
1.5k
1.5k
33k
100k
.022
500p
.1/250v
FeedBack
Bias Range
10kl
1M
470
1M
22K
820
.1
220k
220k
100K
22/50v
1.5k
250p
.1
.047
22/50v
1.5k
100k
3.3m
10p
470k
1m
22/50v
2.2k/3w
22/50v
1.5k
100k
.0033
100k
.022
100
82K
1 ohm
470/3w
470/3w
1 ohm
22k
47/100v
1n4007
100k/3w
Bias Tap
18k/3w
18k/3w
1k/3w
D
C
B
A
RG174
Shielded
V1-2
V1-7
1m
12a
S
T
G
Volume
1ma
Treble
250ka
Bass
250ka
6.8k
Reverb
100kl
Ground Buss
To Power
Transformer
Ground Lug
www.hoffmanamps.com
Mod by sluckey 12/16/2016
Tremolo removed
Cathodyne PI replaced with LTP PI
Hoffman Amplifiers Princeton Reverb