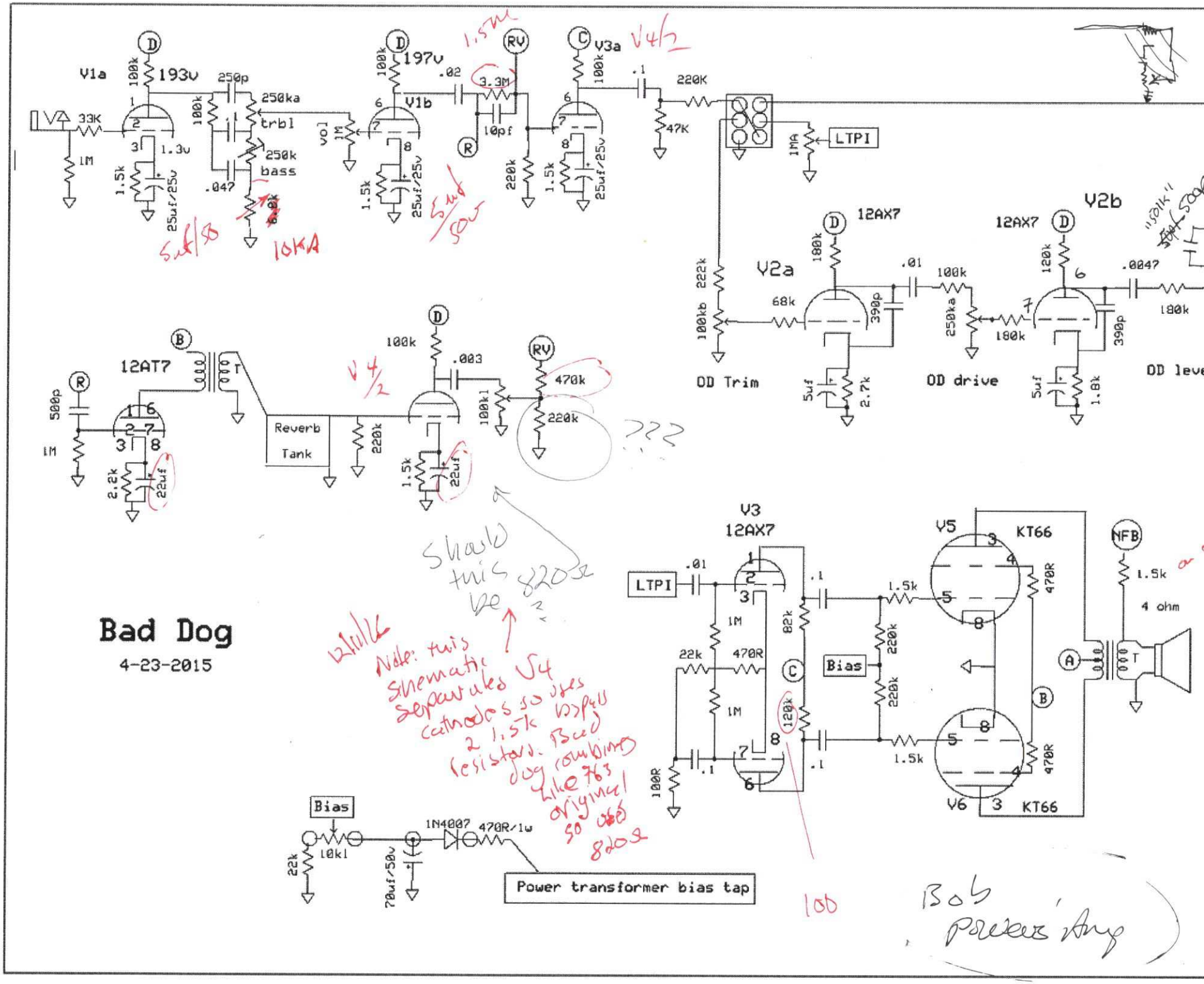
V1a
193v
100k
33K
1M
1.5k
1.3v
25uf/25v
250p
250ka
trbl
250k
bass
.047
vol
1M
V1b
197v
100k
.02
3.3M
10pf
1.5M
V3a
V4/2
100k
.1
220K
47K
220k
1.5k
25uf/25v
1MA
LTPI
V2a
12AX7
100k
222k
100kb
68k
390p
.01
100k
250ka
180k
V2b
12AX7
120k
.0047
180k
390p
5uf
2.7k
1.8k
OD Trim
OD drive
OD level
12AT7
500p
1M
2.2k
22uf
Reverb
Tank
220k
100k
.003
100k1
470k
220k
V4/2
1.5k
22uf
???
Should this be 820Ω
Note: this schematic separates V4 cathodes so uses 2 1.5k resistors. Bad dog combines like 763 original so use 820Ω
V3
12AX7
LTPI
.01
1M
22k
470R
1M
82k
120k
.1
100R
Bias
220k
220k
1.5k
1.5k
V5
KT66
470R
V6
KT66
470R
NFB
1.5k
4 ohm
Bias
22k
10k1
70uf/50v
1N4007
470R/1w
Power transformer bias tap
100
Bad Dog
4-23-2015
Bob's preamp