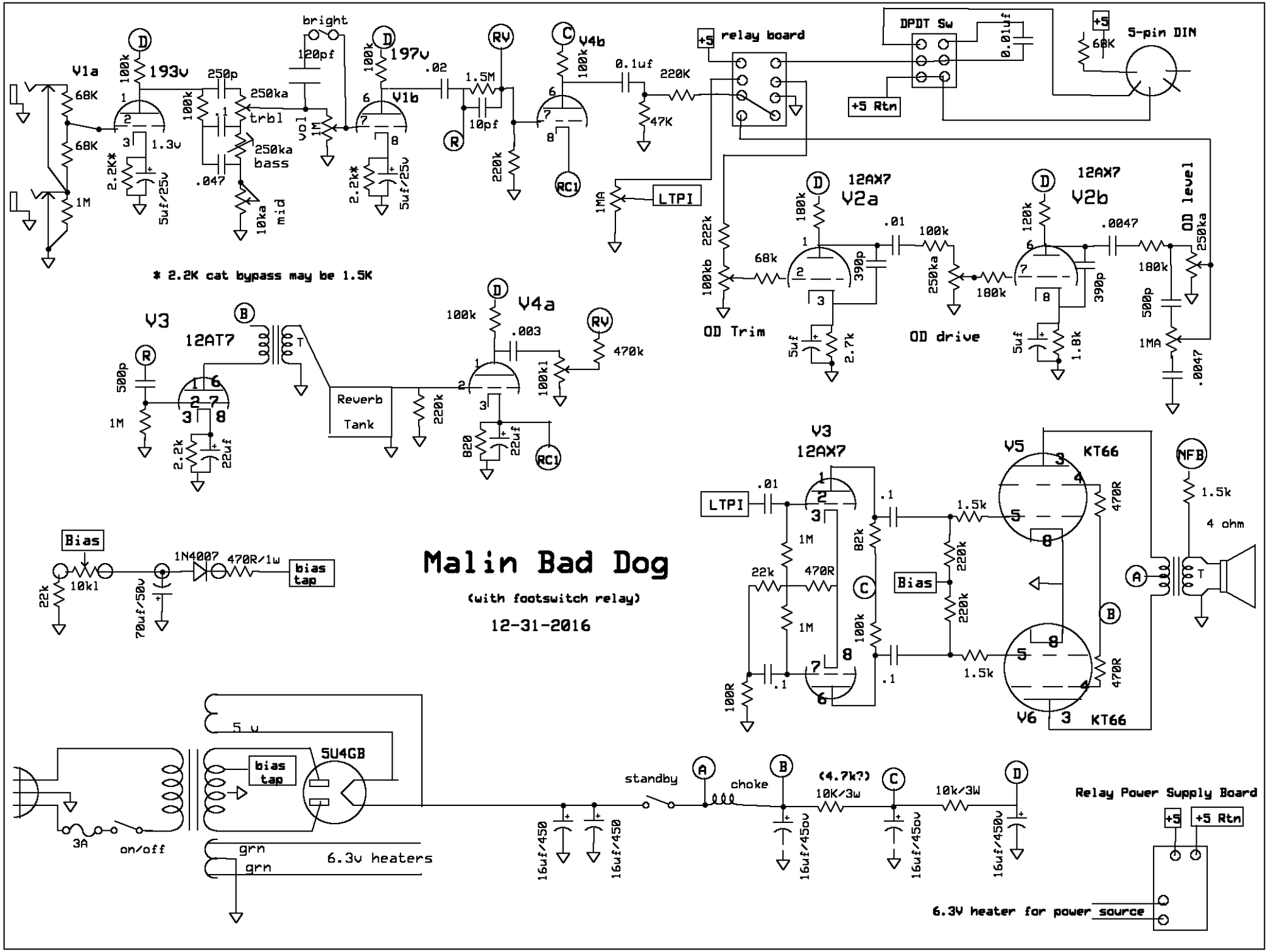
Malin Bad Dog
(with footswitch relay)
12-31-2016
V1a
193v
V1b
197v
V4b
V4a
V3
12AT7
V2a
12AX7
V2b
12AX7
V3
12AX7
V5
KT66
V6
KT66
5U4GB
bright
120pf
250p
250ka
trbl
250ka
bass
10ka
mid
vol
1M
.02
1.5M
10pf
0.1uf
220K
47K
relay board
LTPI
DPDT Sw
0.01uf
5-pin DIN
+5 Rtn
* 2.2K cat bypass may be 1.5K
OD Trim
OD drive
OD level
Reverb
Tank
Bias
1N4007
470R/1w
bias tap
NFB
4 ohm
5 v
6.3v heaters
grn
grn
3A
on/off
standby
choke
(4.7k?)
10K/3w
10k/3W
16uf/450
16uf/450v
Relay Power Supply Board
6.3V heater for power source