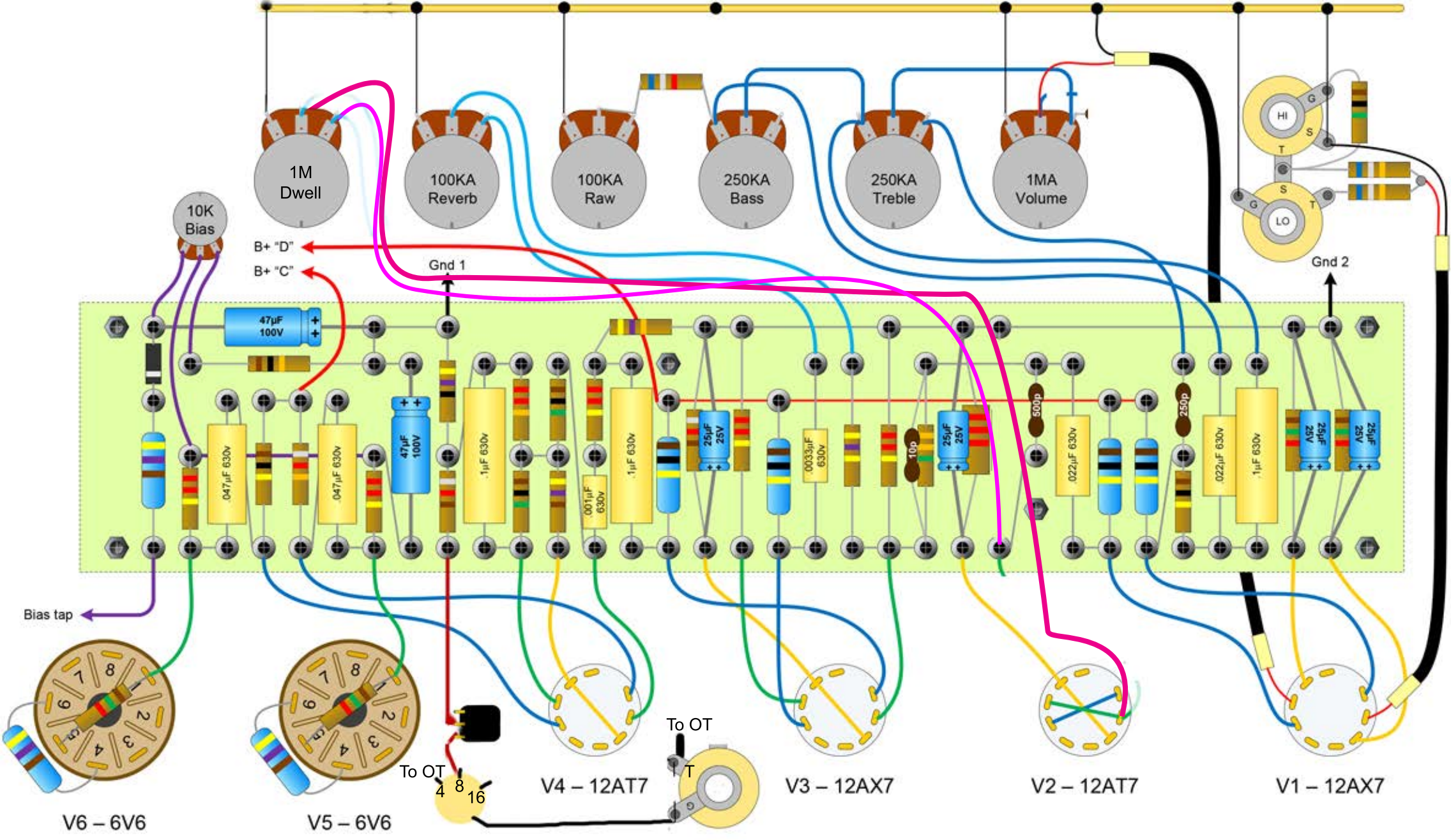
1M
Dwell
100KA
Reverb
100KA
Raw
250KA
Bass
250KA
Treble
1MA
Volume
10K
Bias
B+ "D"
B+ "C"
Gnd 1
Gnd 2
HI
LO
G
S
T
47µF
100V
.047µF 630v
.047µF 630v
47µF
100V
.1µF 630v
.001µF
630v
.1µF 630v
25µF
25V
.0033µF
630v
10p
25µF
25V
500p
.022µF 630v
250p
.022µF 630v
.1µF 630v
25µF
25V
25µF
25V
Bias tap
To OT
4
8
16
To OT
T
V6 – 6V6
V5 – 6V6
V4 – 12AT7
V3 – 12AX7
V2 – 12AT7
V1 – 12AX7