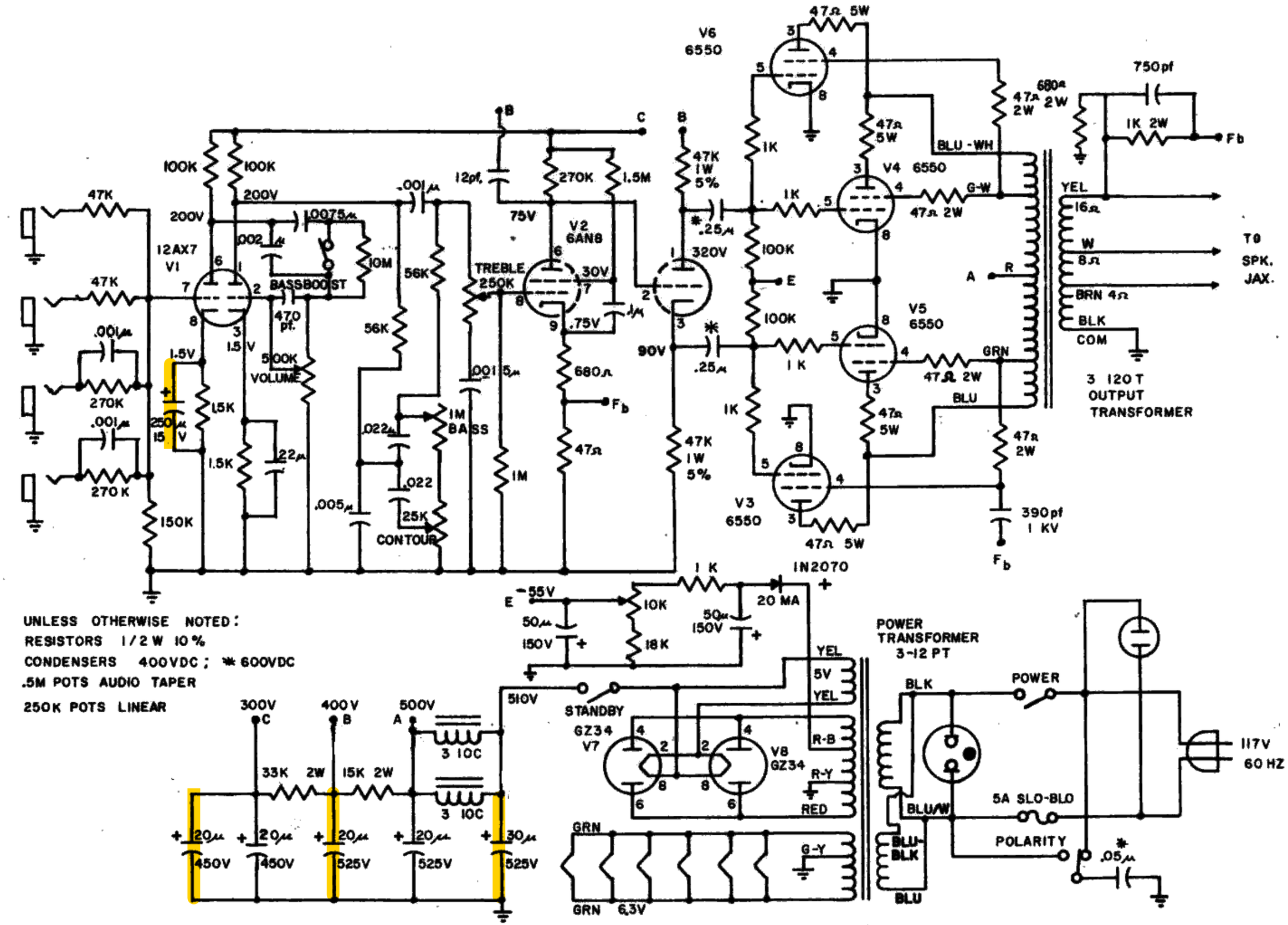

UNLESS OTHERWISE NOTED:
RESISTORS 1/2 W 10%
CONDENSERS 400VDC; * 600VDC
.5M POTS AUDIO TAPER
250K POTS LINEAR