SHERMAN 18

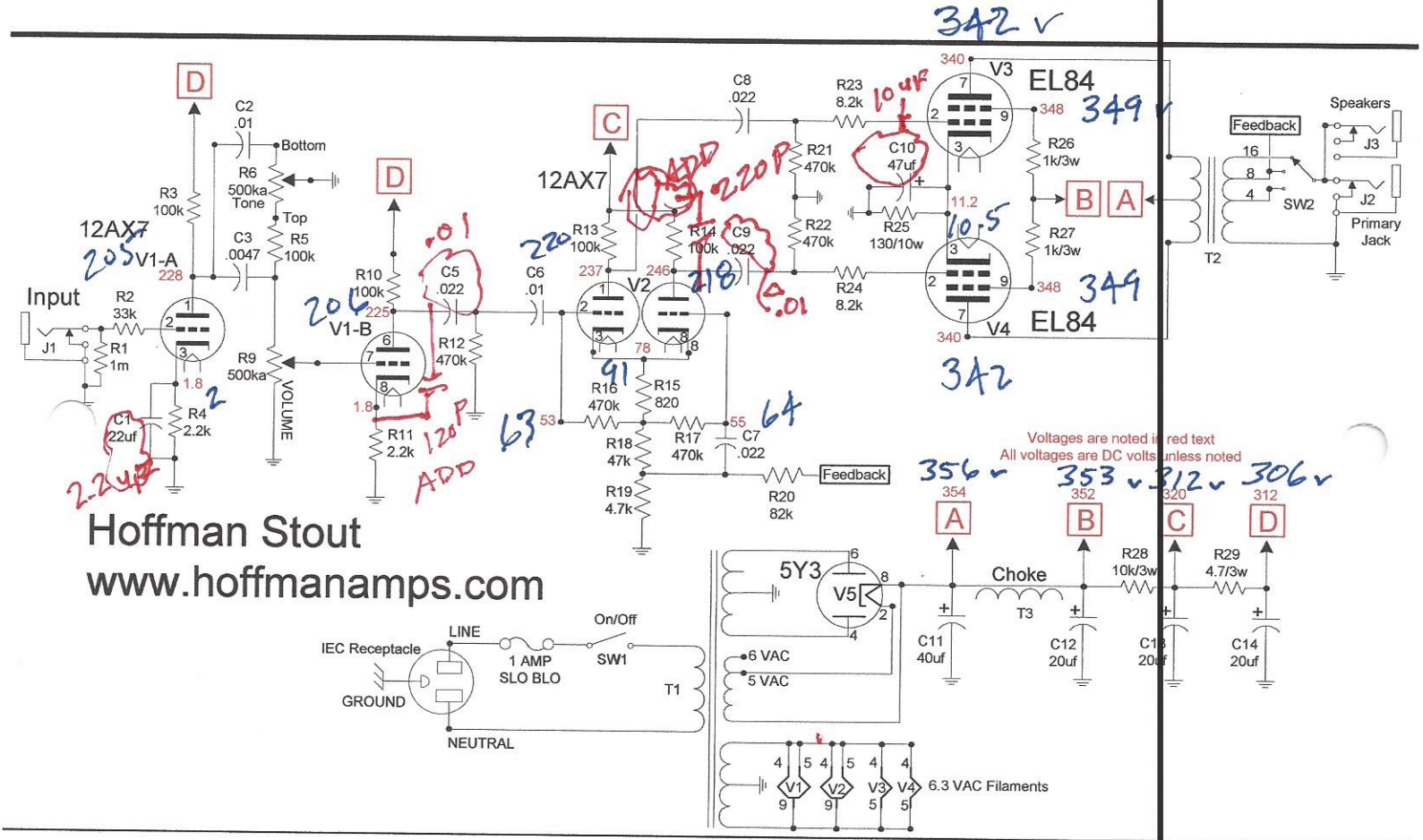

Hoffman Stout
www.hoffmanamps.com

AS BUILT VOLTAGES 2-11-17