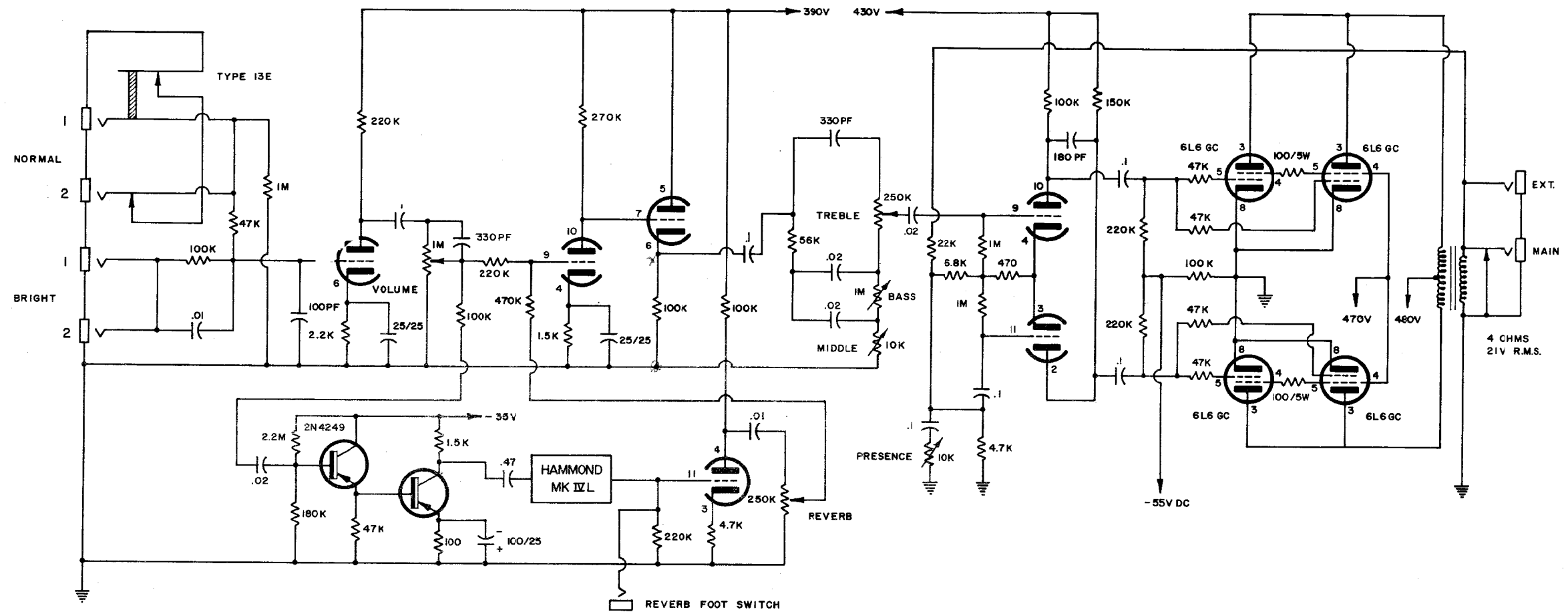

ALL PREAMP & DRIVER TUBES TYPE 6C10
ALL DIODES 1A AT 1KV
ALL CAPACITORS 400V UNLESS SPECIFIED
ALL RESISTORS 1/4W UNLESS NOTED

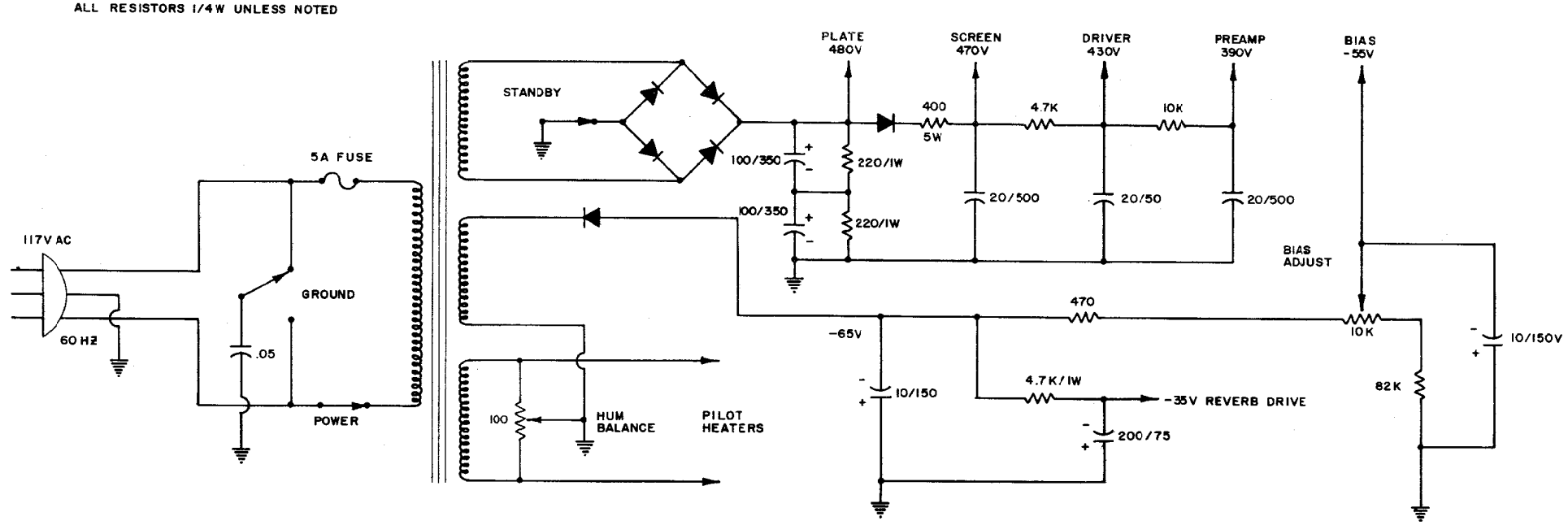

PEAVEY ELECTRONICS	
Meridian - Mississippi	
DRAWN: H.T.C.	DATE: 7-1-72
CHECKED:	
APPROVED:	