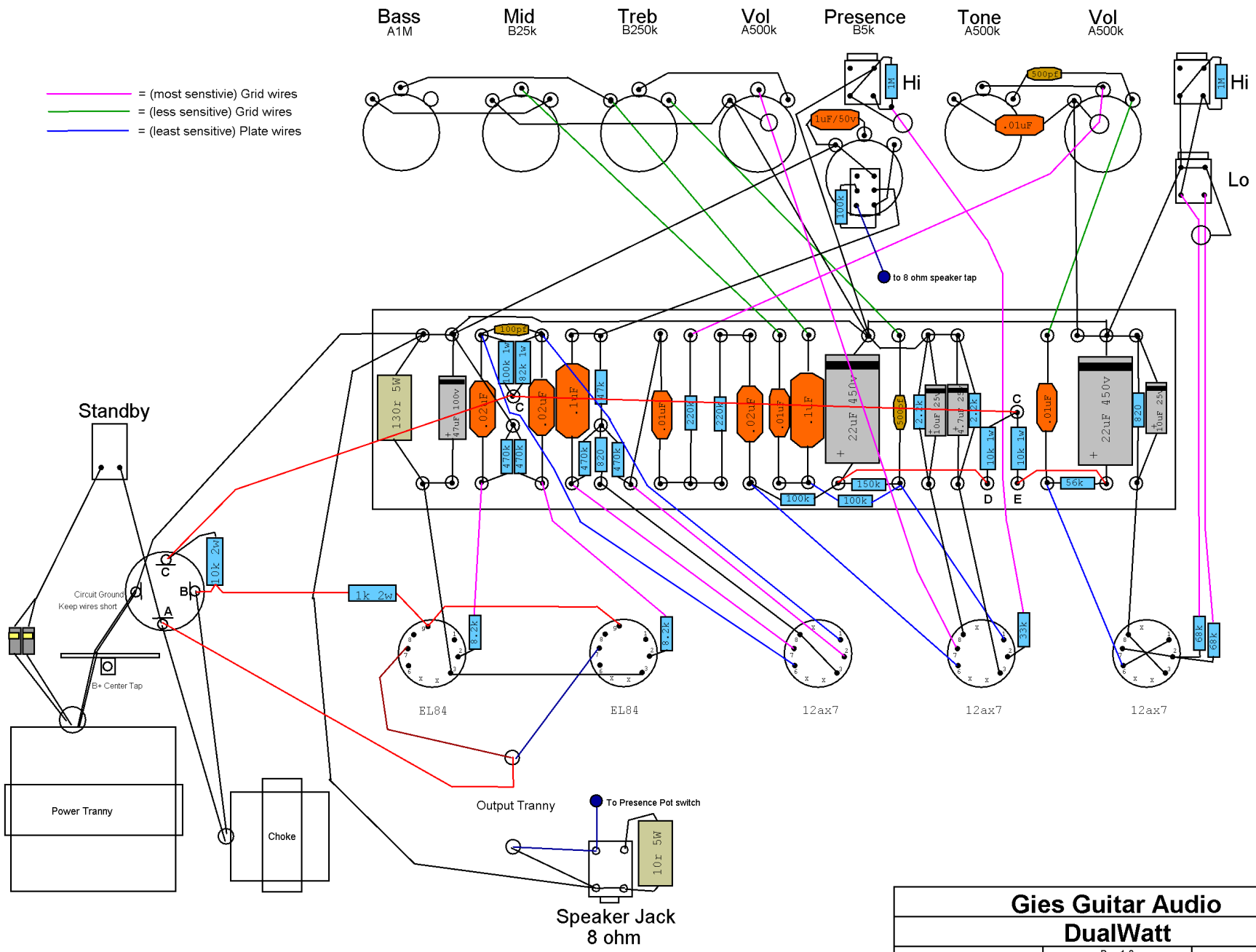

Gies Guitar Audio		
DualWatt		
Joe Gies	Rev 1.0 2016-12-24	Layout