DWG. NO.	SH	REV.
133SCH_1	1	

REVISIONS

CHANGE #	REV	DESCRIPTION	DATE	REV BY

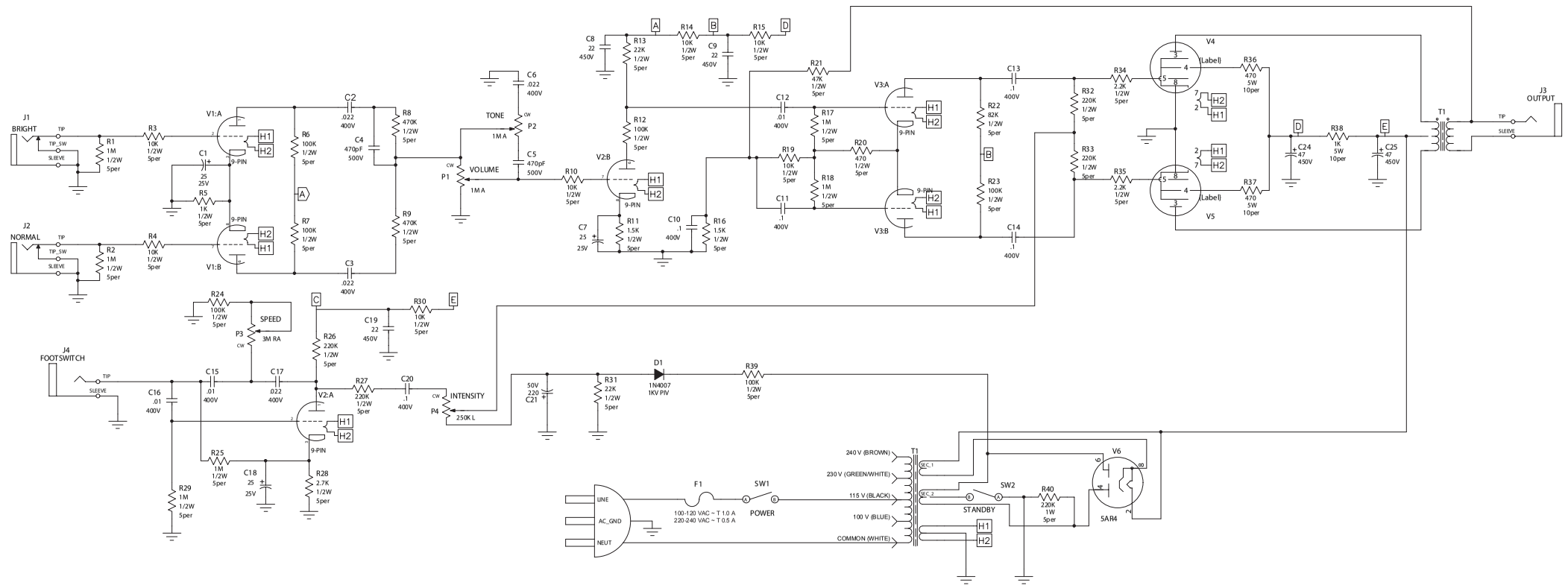

UNLESS OTHERWISE SPECIFIED DIMENSIONS ARE IN MILLIMETERS TOLERANCES ARE:	APPROVALS	DATE
FRACTIONS %%p DECIMALS .XX %%p .XXX %%p ANGLES %%p	DRAWN WFB	08-May-07
MATERIAL	CHECKED	
	ISSUED	
COLOR/FINISH		
DO NOT SCALE DRAWING		

LOUD Technologies Inc.

SAINT LOUIS, MISSOURI U.S.A.

J20 Schematic

SIZE	ARTWORK NO.	DWG. NO.	REV.
D		133SCH_1	
SCALE 1.000		SHEET 1 OF 1	

THE INFORMATION CONTAINED HEREIN IS PROPRIETARY AND CONFIDENTIAL PROPERTY OF LOUD TECHNOLOGIES INC. ALL RIGHTS RESERVED