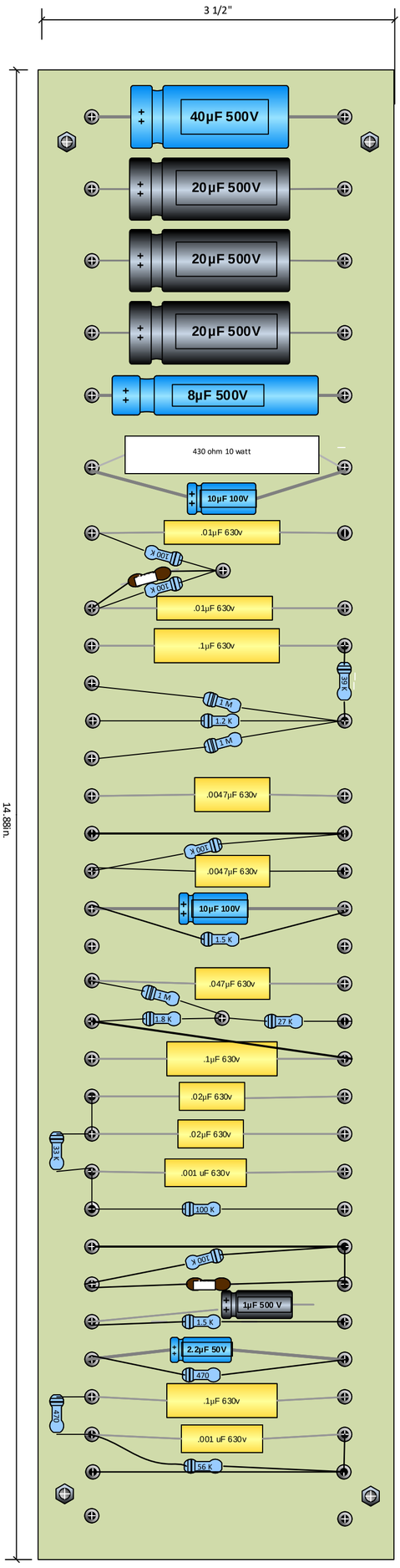
3 1/2"
14.88in.
40µF 500V
20µF 500V
20µF 500V
20µF 500V
8µF 500V
430 ohm 10 watt
10µF 100V
.01µF 630v
100 K
.001 K
.01µF 630v
.1µF 630v
39 K
1 M
1.2 K
1 M
.0047µF 630v
.001 K
.0047µF 630v
10µF 100V
1.5 K
.047µF 630v
1 M
1.8 K
27 K
.1µF 630v
.02µF 630v
.02µF 630v
33 K
.001 uF 630v
100 K
.001 K
1µF 500 V
1.5 K
2.2µF 50V
470
.1µF 630v
470
.001 uF 630v
56 K