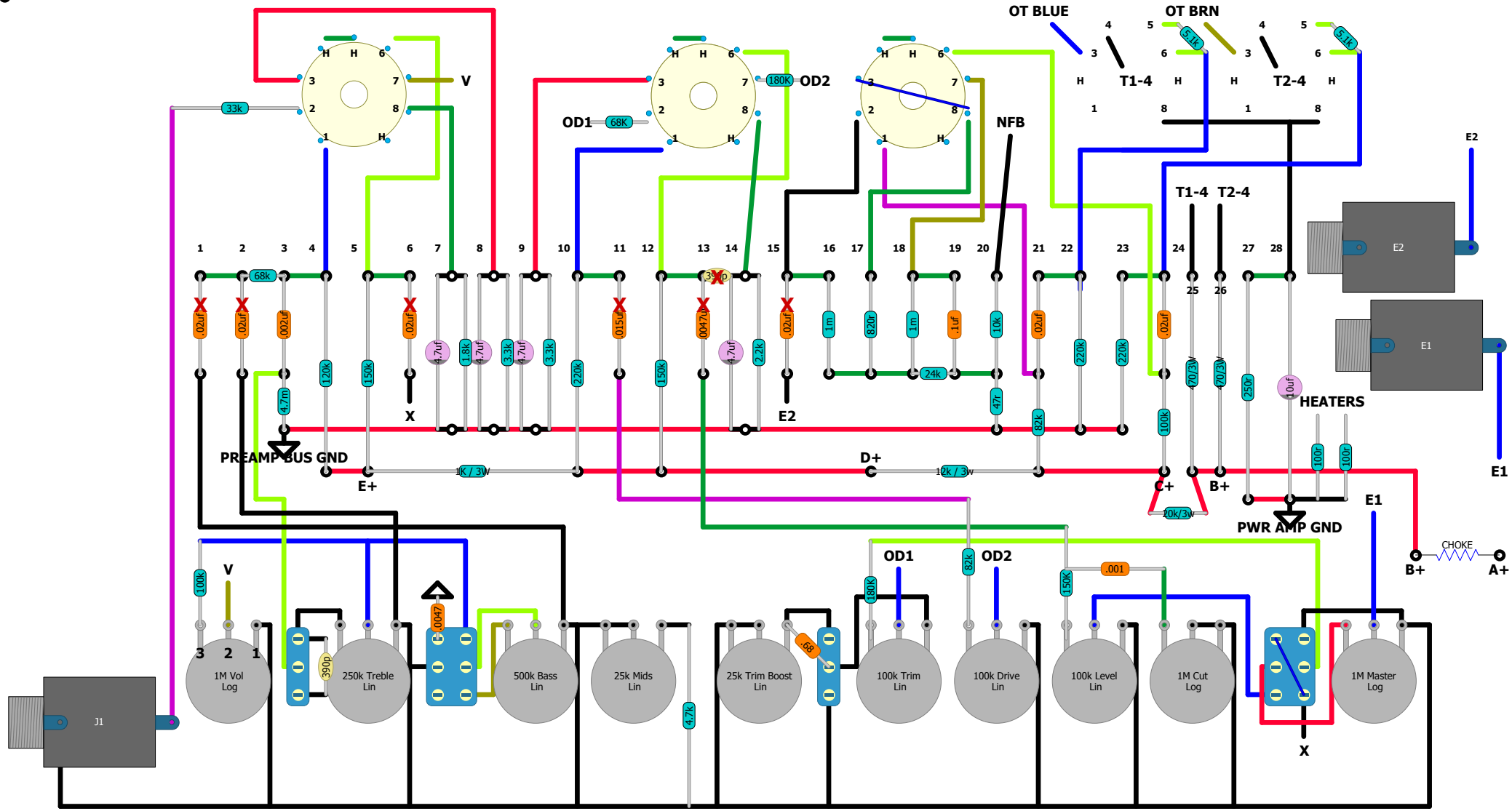
OT BLUE
OT BRN
T1-4
T2-4
V
OD1
OD2
NFB
E2
E1
HEATERS
PREAMP BUS GND
PWR AMP GND
E+
D+
C+
B+
X
CHOKE
A+
J1
1M Vol Log
250k Treble Lin
500k Bass Lin
25k Mids Lin
25k Trim Boost Lin
100k Trim Lin
100k Drive Lin
100k Level Lin
1M Cut Log
1M Master Log