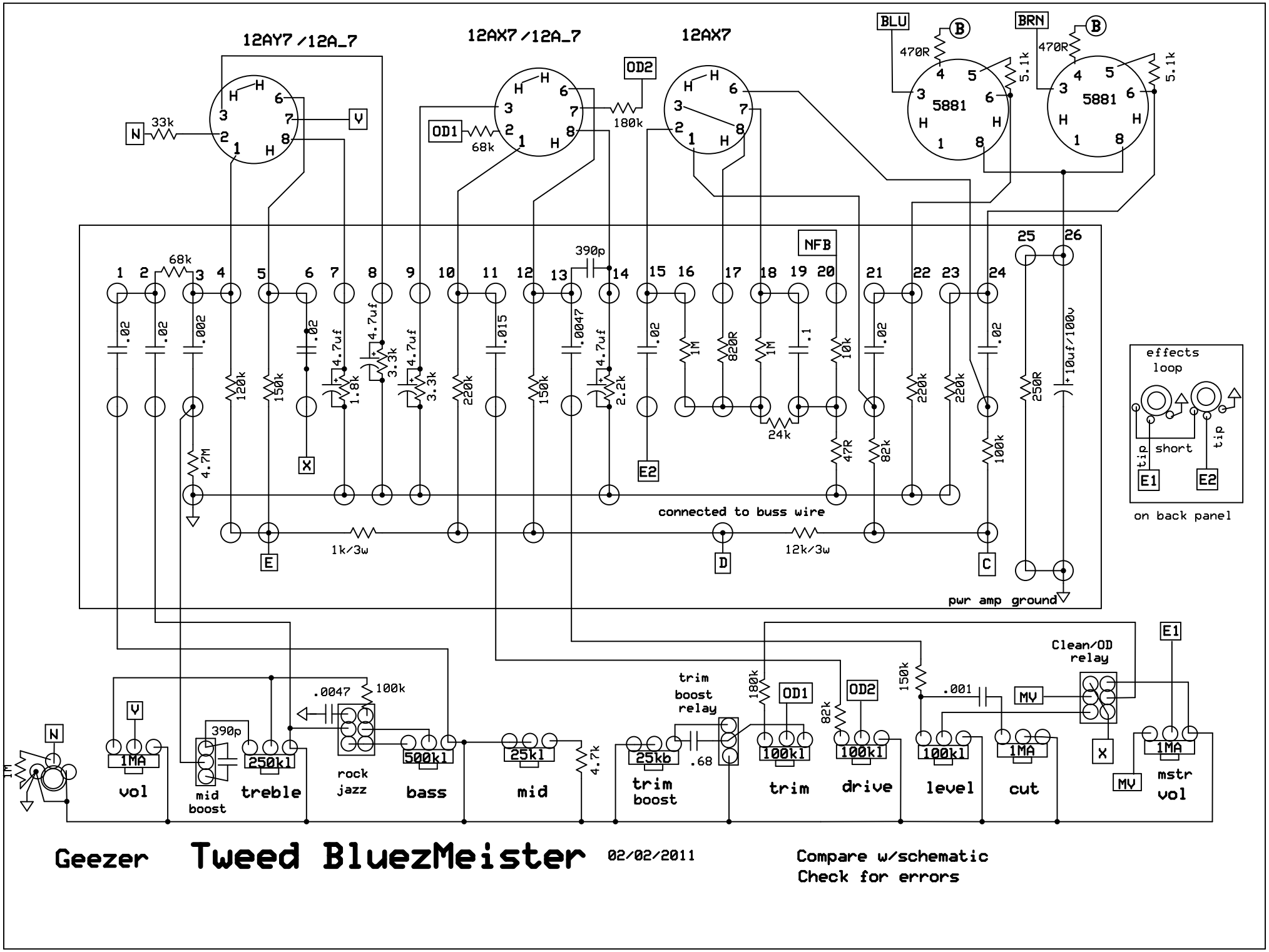

C:\Users\Administrator\Downloads\TweedBluezMeisterHoffman Layout.sch - Sheet1