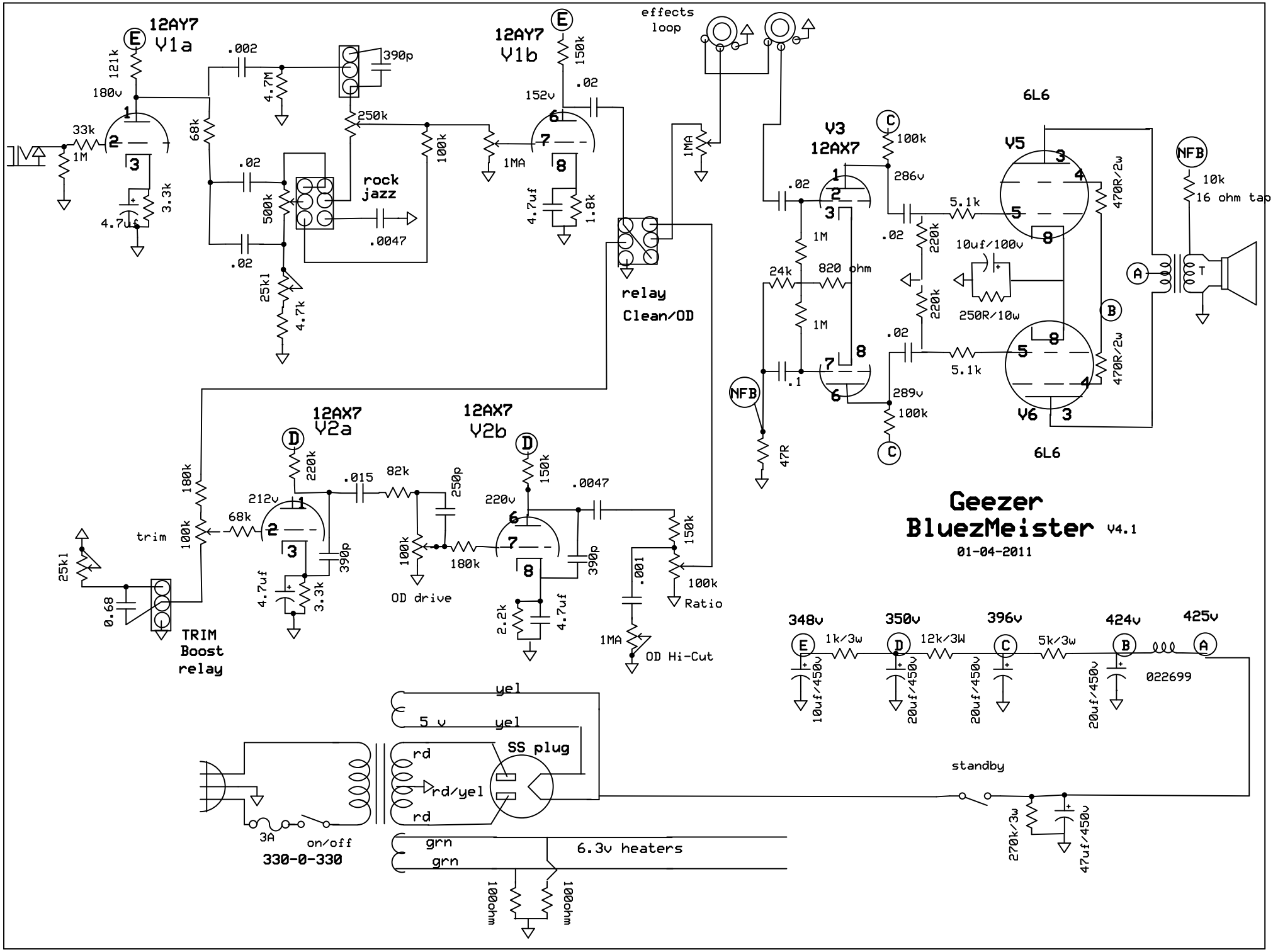

C:\Users\Administrator\Downloads\Tweed BluezMeisterSchematic.sch - Sheet1