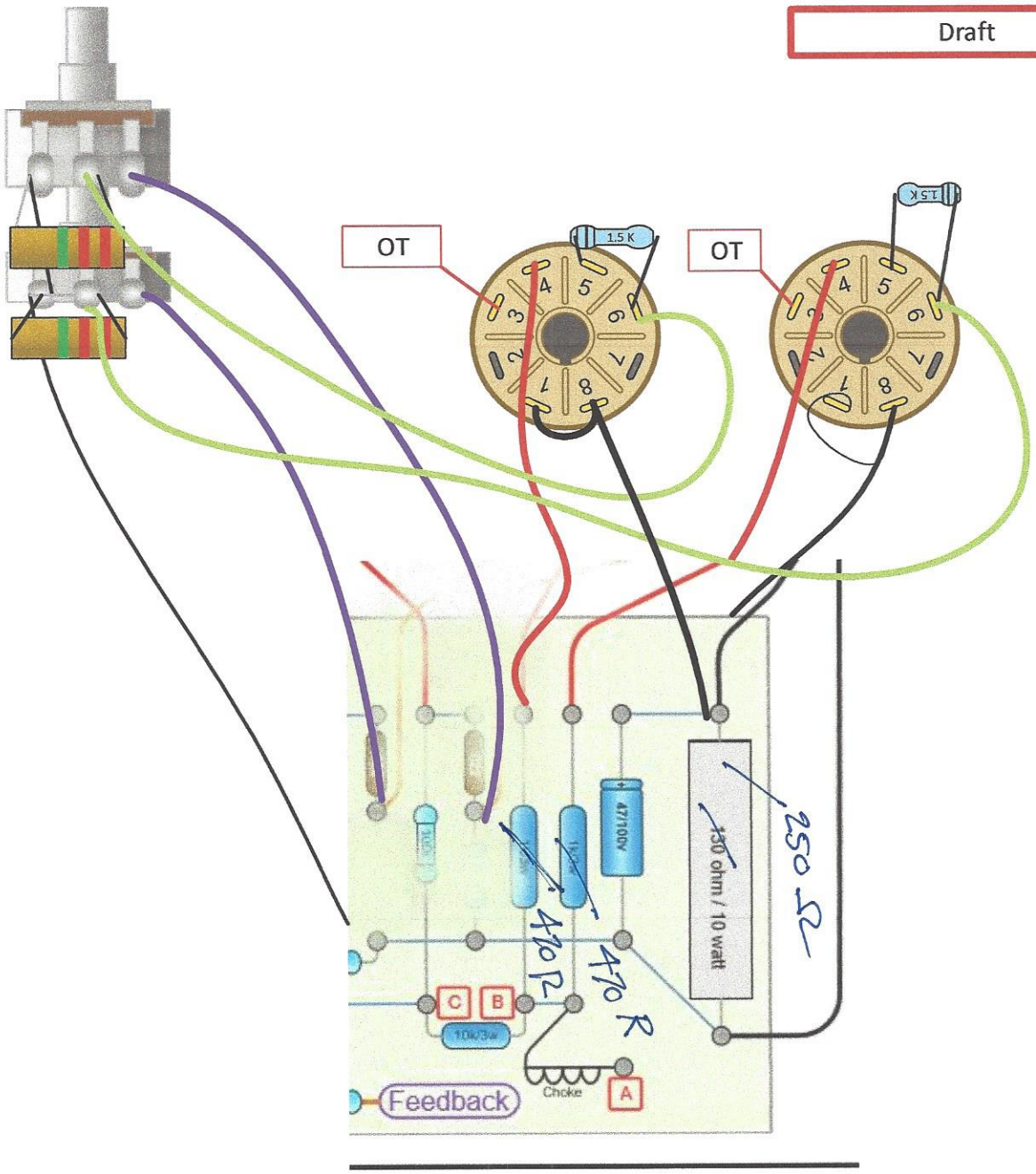18 Watt Stout 6 V 6 with Lar
Mar PPIMV