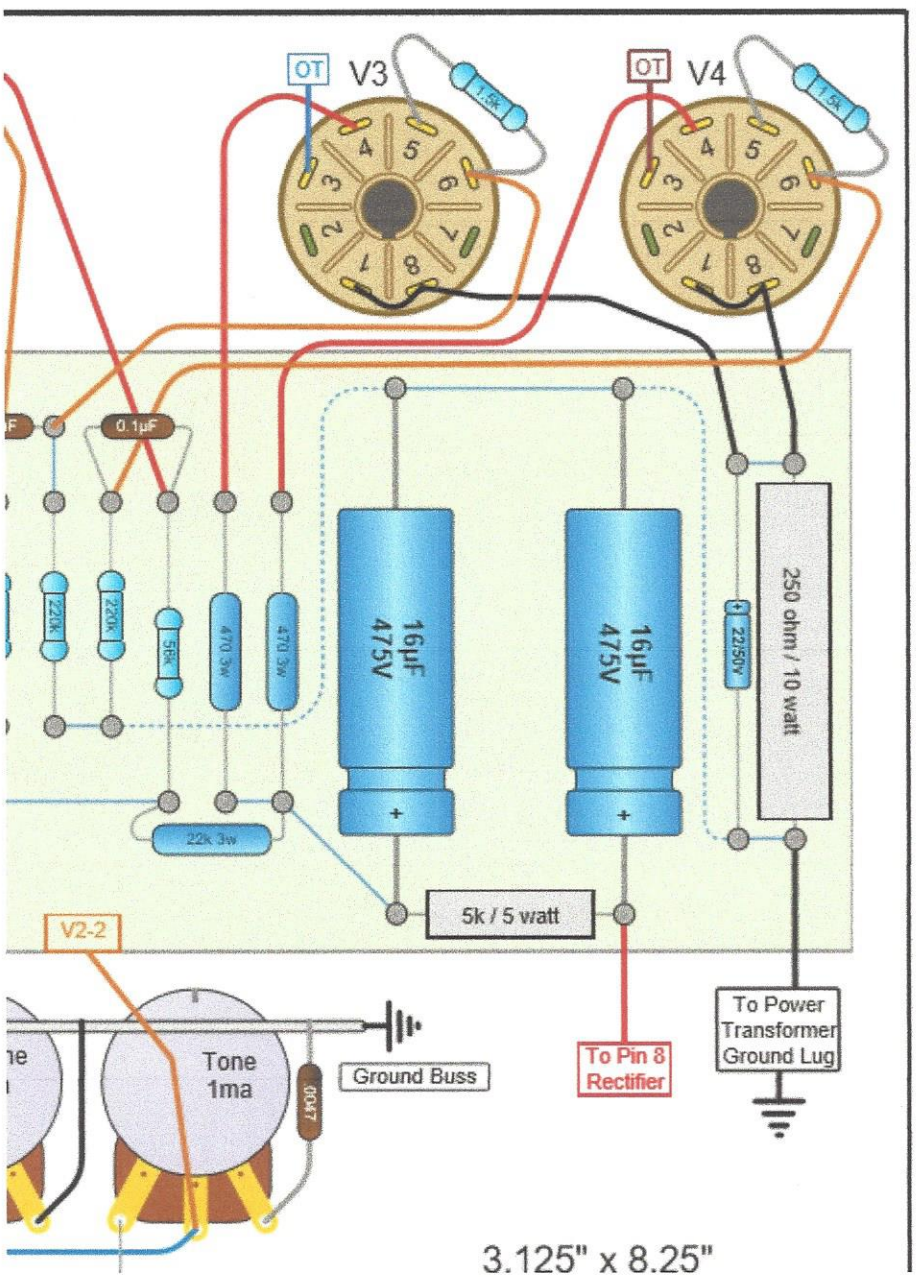
OT
V3
1.5k
OT
V4
1.5k
0.1µF
220k
220k
56k
470 3w
470 3w
16µF
475V
16µF
475V
22/50v
250 ohm / 10 watt
22k 3w
5k / 5 watt
V2-2
Tone
1ma
.001µF
Ground Buss
To Pin 8
Rectifier
To Power
Transformer
Ground Lug
3.125" x 8.25"