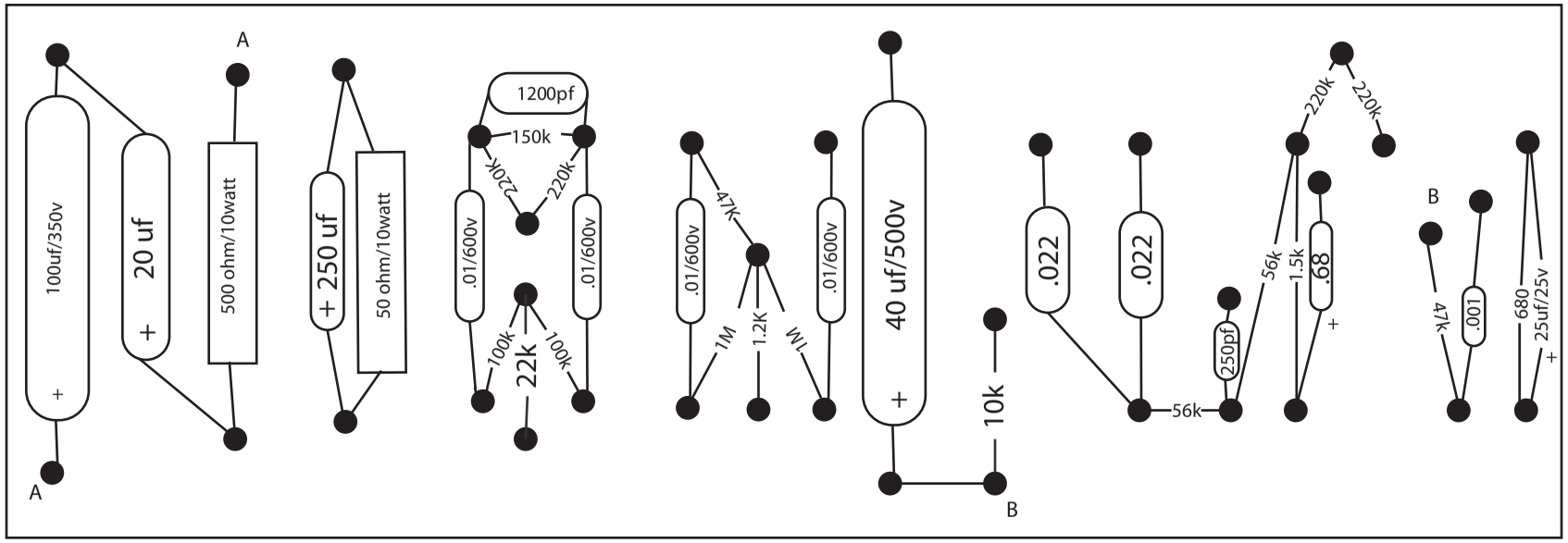

Prescription original