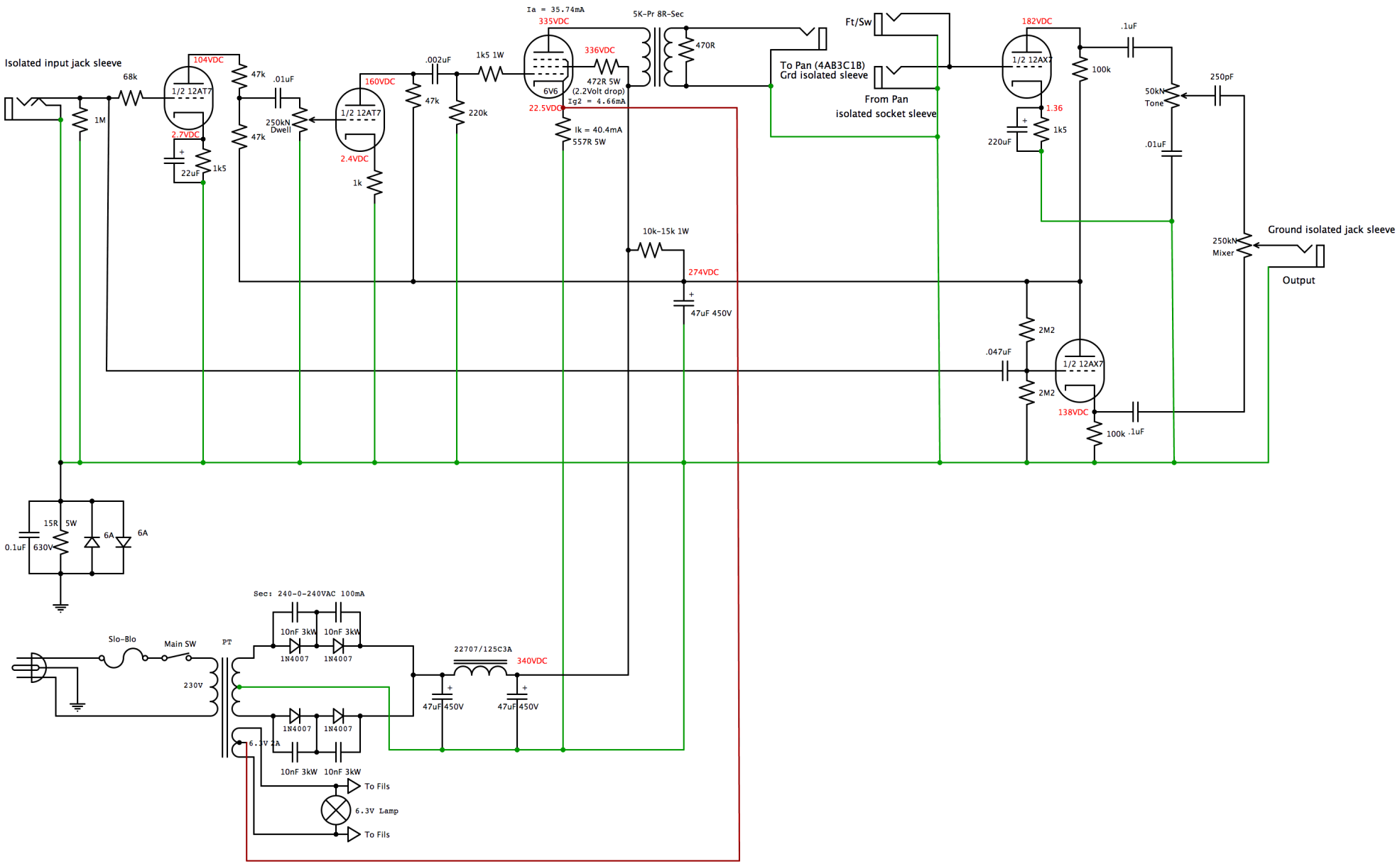

Tubeswell 6G15		
	Rev 1.0 12/2/08	As Built