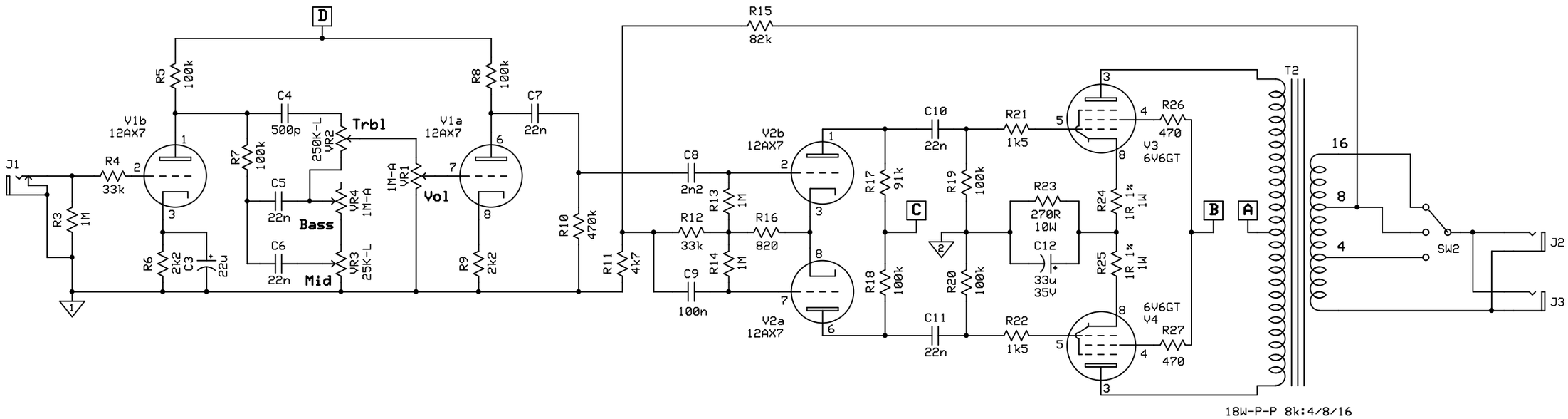

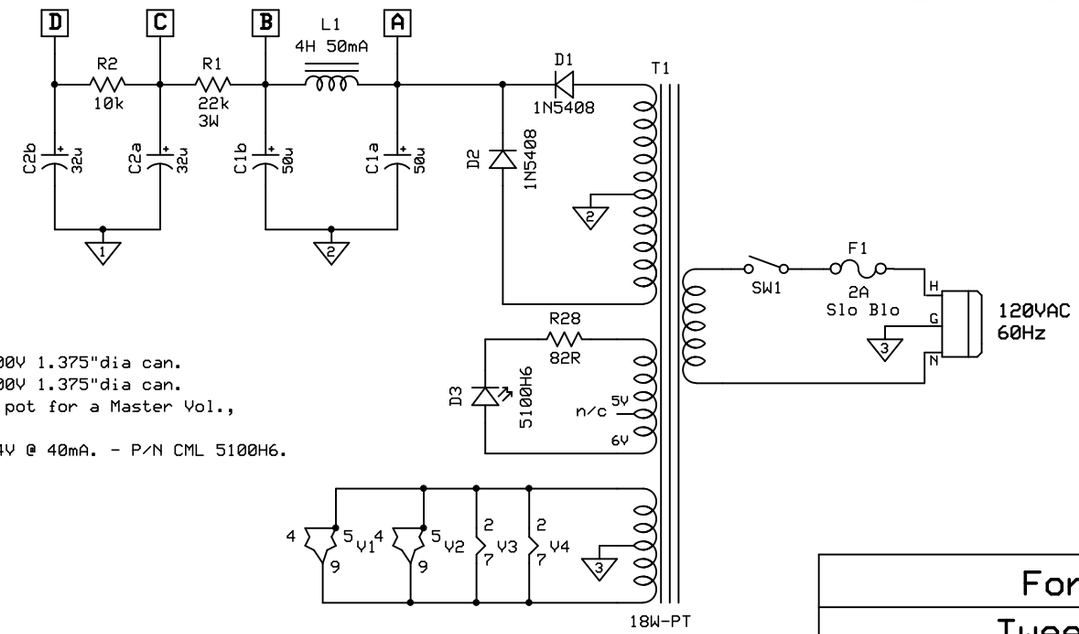

Tube Voltage Chart

V1	V2	V3	V4	
				1
				2
				3
				4
				5
				6
				7
				8
		n/a	n/a	9

Notes:

1) C1 is dual section F&T 50uF/50uF @ 500V 1.375"dia can.
2) C2 is dual section F&T 32uF/32uF @ 500V 1.375"dia can.
3) R10 may be substituted with a 500K-A pot for a Master Vol., tie the V1a end of C8 to the wiper.
4) D3 is .25" mount Blue LED Vfwd is 3.4V @ 40mA. - P/N CML 5100H6.

Forum Amps		
Tweedy Stout		
DH/PM	Rev 1.0 8/24/2017	Page 1 of 1