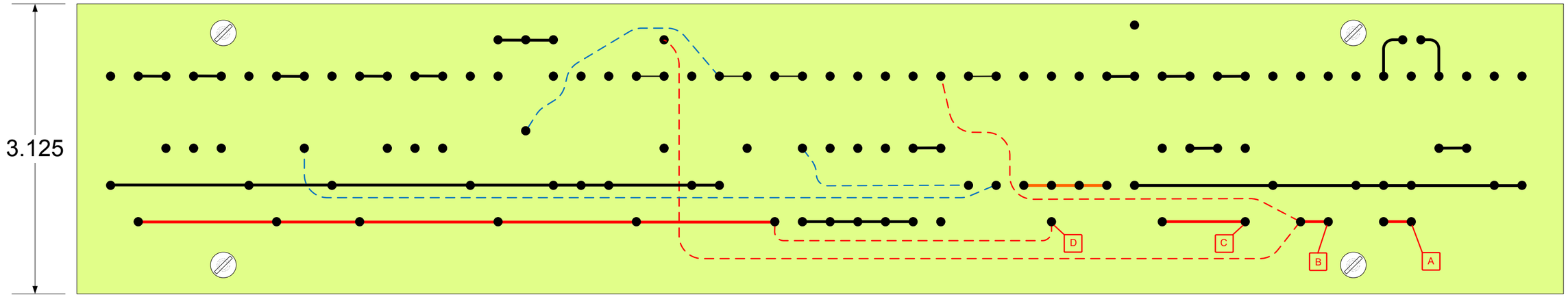
3.125
16.00
A
B
C
D

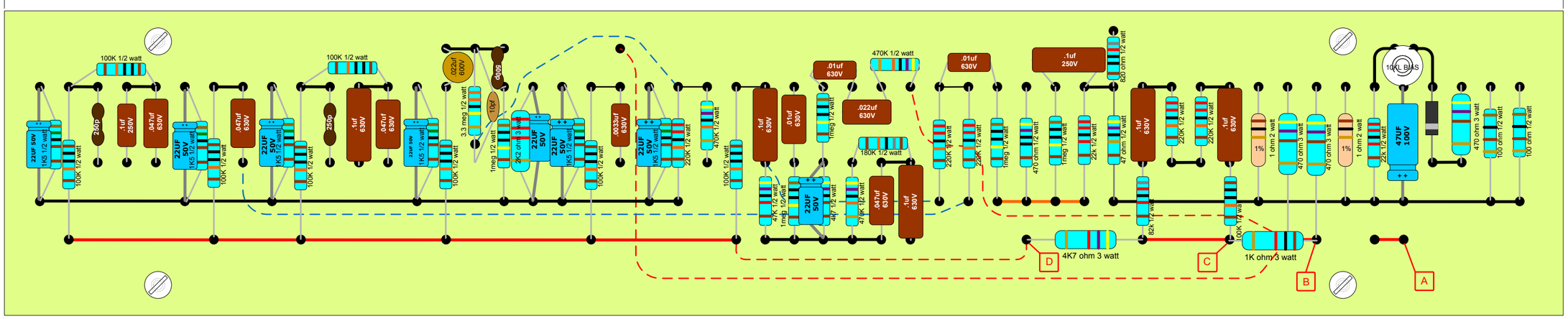
100K 1/2 watt
22UF 50V
1K5 1/2 watt
250p
.1uf 250V
.047uf 630V
.022uf 600V
90pf
3.3 meg 1/2 watt
10pf
2K2 ohm 3 watt
.0033uf 630V
220K 1/2 watt
470K 1/2 watt
.01uf 630V
.022uf 630V
180K 1/2 watt
.1uf 630V
820 ohm 1/2 watt
47 ohm 1/2 watt
1 ohm 2 watt
470 ohm 3 watt
100K BIAS
47UF 100V
100 ohm 1/2 watt
4K7 ohm 3 watt
1K ohm 3 watt
A
B
C
D

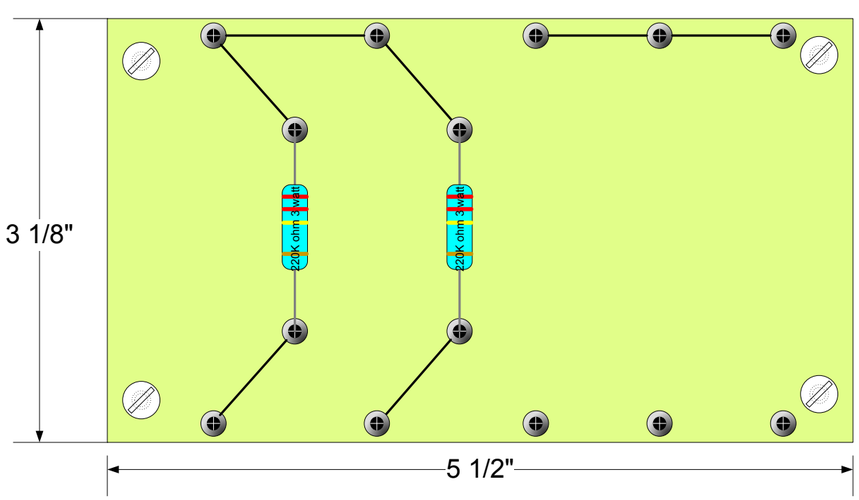
3 1/8"
5 1/2"
220K ohm 3 watt

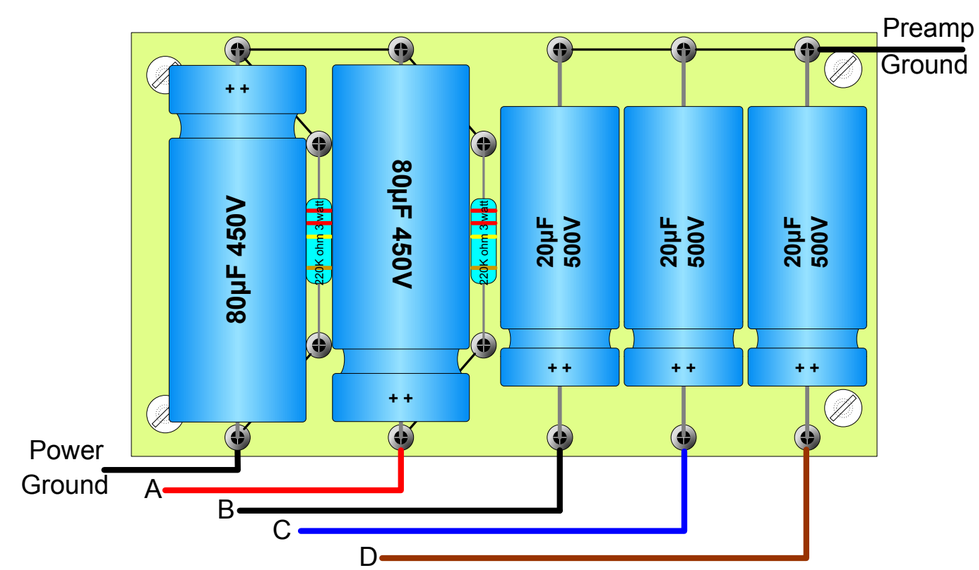
Preamp
Ground
80µF 450V
80µF 450V
20µF 500V
20µF 500V
20µF 500V
220K ohm 3 watt
Power
Ground
A
B
C
D