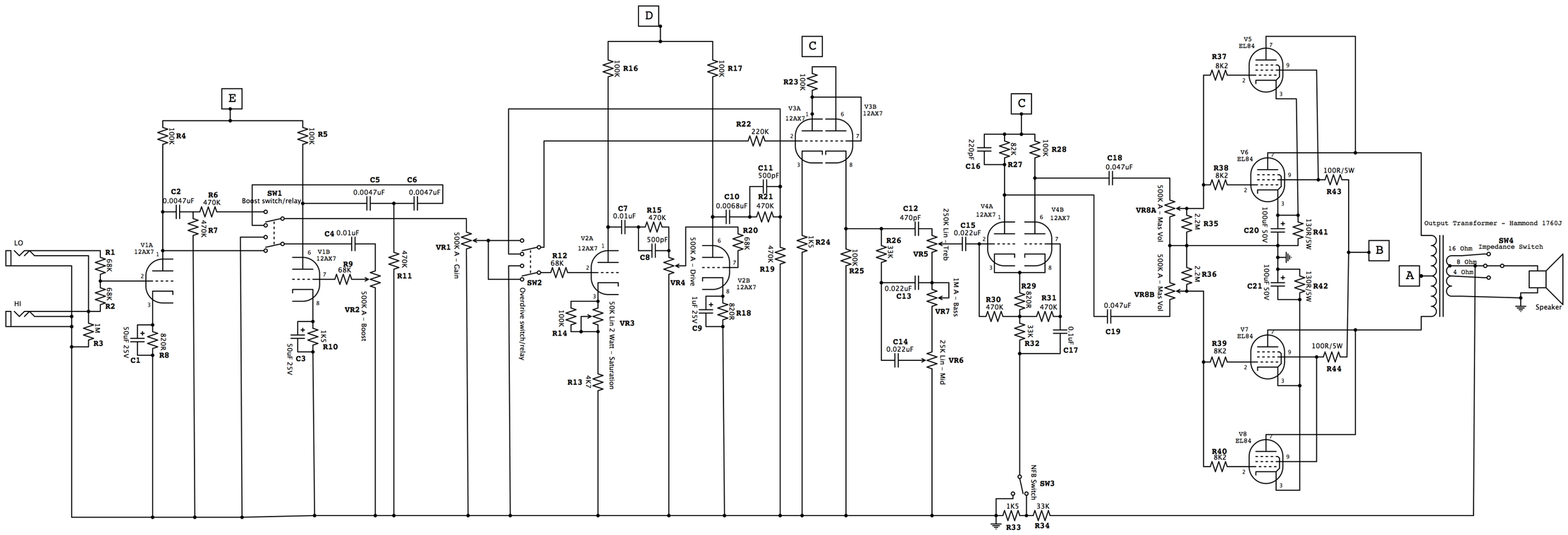

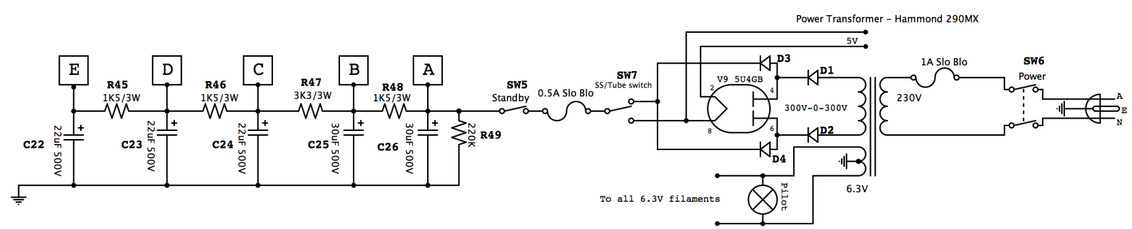

Brookfield Tube Audio		
Dirty Thirty		
Reuben Hopkins	Rev 1.0 2017-11-7	Page 1