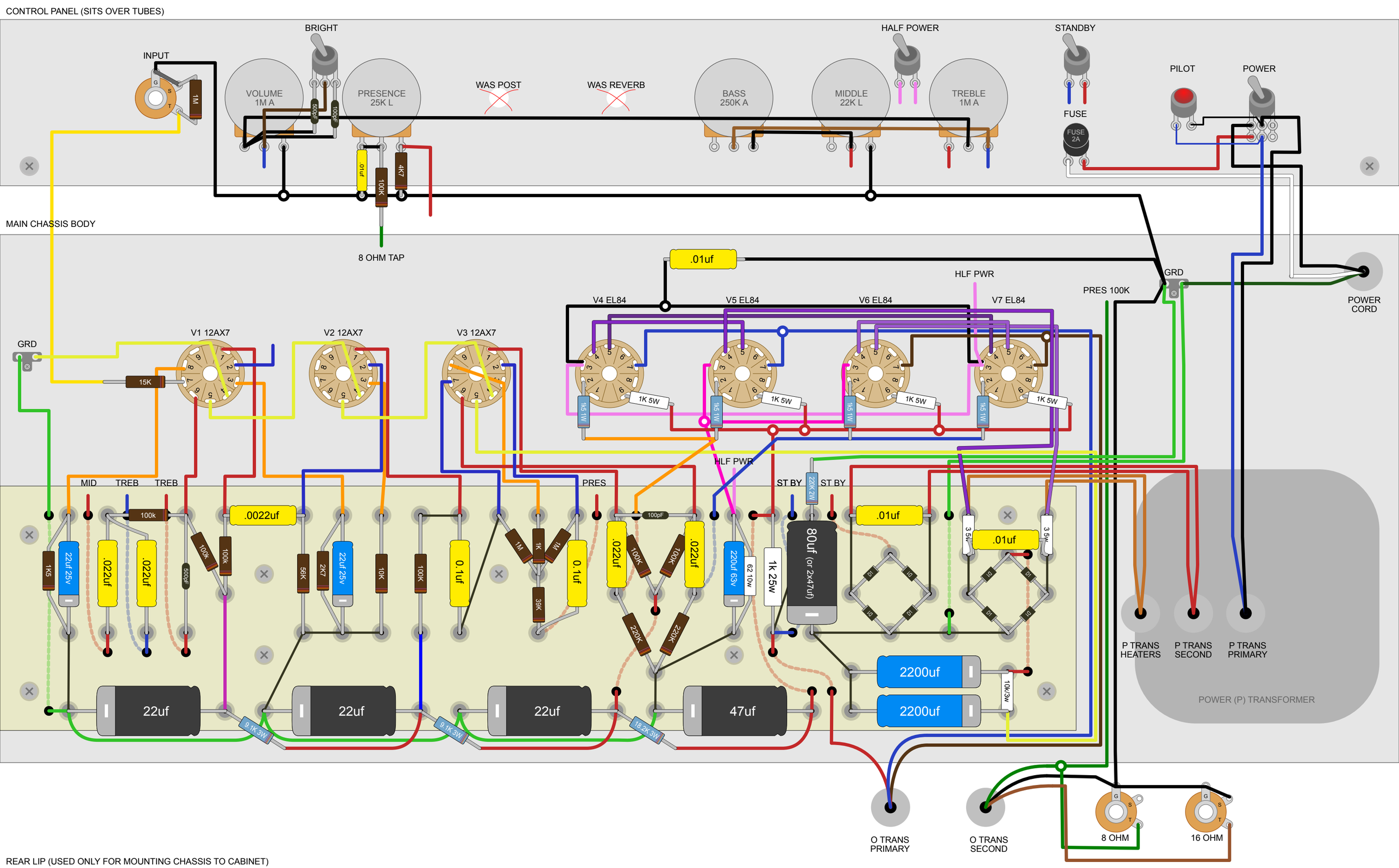

JOHN ARTHUR - PEAVEY CLASSIC 30 CONVERSION TO TRAINWRECK LIVERPOOL - VERSION 1.1