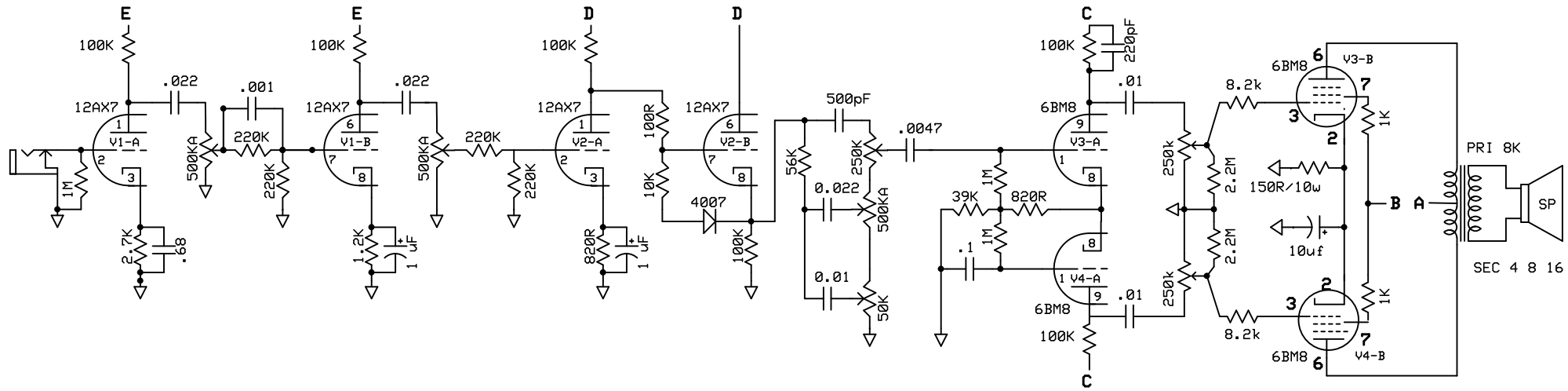

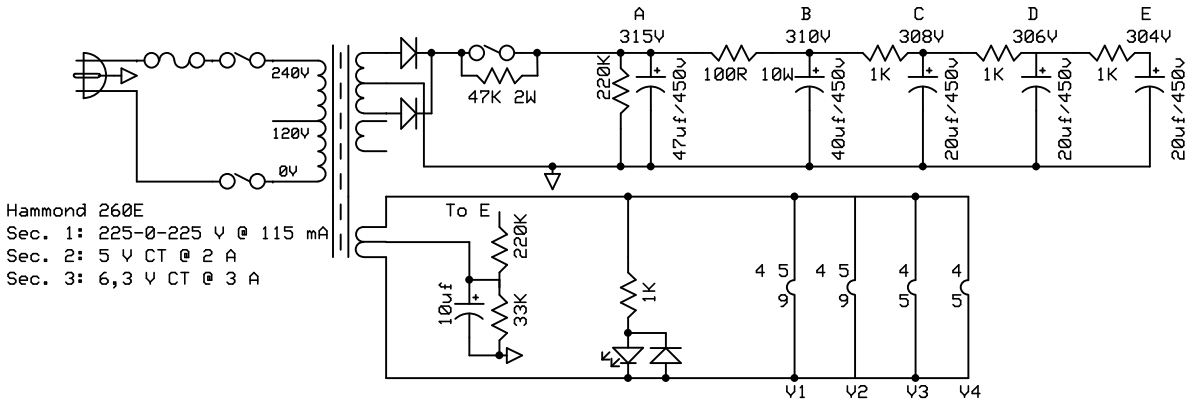

Hammond 260E
Sec. 1: 225-0-225 V @ 115 mA
Sec. 2: 5 V CT @ 2 A
Sec. 3: 6,3 V CT @ 3 A

AX84 SEL - 6BM8
Version: 1.0
Date: 31-12-2017