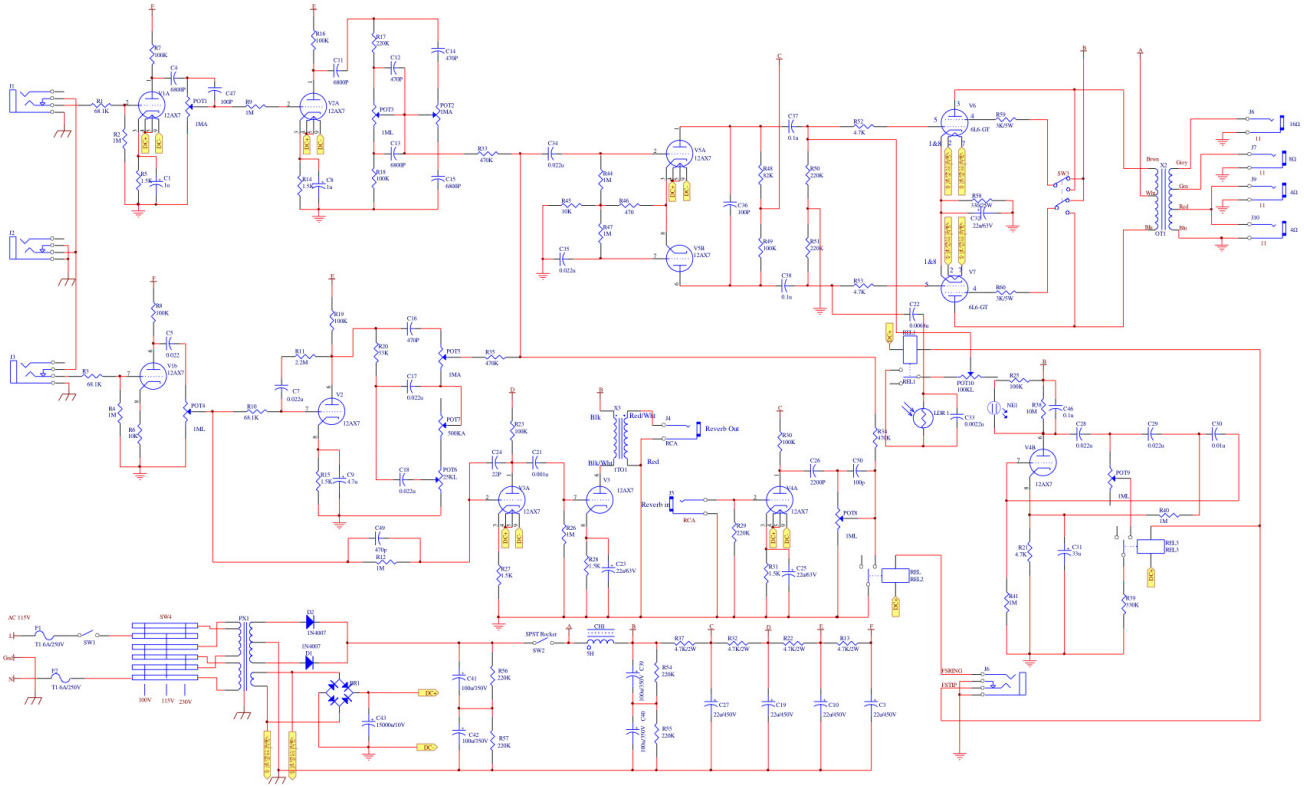
V1A
12AX7
V2A
12AX7
V5A
12AX7
V5B
12AX7
V6
6L6-GT
V7
6L6-GT
V1b
12AX7
V2
12AX7
V3A
12AX7
V3
12AX7
V4A
12AX7
V4B
12AX7
OT1
Reverb Out
Reverb in
RCA
SPST Rocker
SW2
SW3
SW4
PX1
AC 115V
100V
115V
230V
1N4007
BR1
C43
15000u/10V
C41
100u/350V
C42
100u/350V
R56
220K
R57
220K
C39
100u/350V
C40
100u/350V
R54
220K
R55
220K
R37
4.7K/2W
R32
4.7K/2W
R22
4.7K/2W
R15
4.7K/2W
C27
22u/450V
C19
22u/450V
C10
22u/450V
C3
22u/450V
FSRING
FSTIP
J6
J4
J5
J1
J2
J3
J7
J8
J9
J10
J11
16Ω
8Ω
4Ω
4Ω
Brown
Grey
White
Green
Red
Black
Blue
Red/Wht
Blk
Blk/Wht
Red
POT1
POT2
POT3
POT4
POT5
POT6
POT7
POT8
POT9
POT10
500KA
500KL
100KL
1MA
1ML
LDR1
NE1
REL1
REL2
REL3
SW1
F1
T1 6A/250V
F2
T1 6A/250V