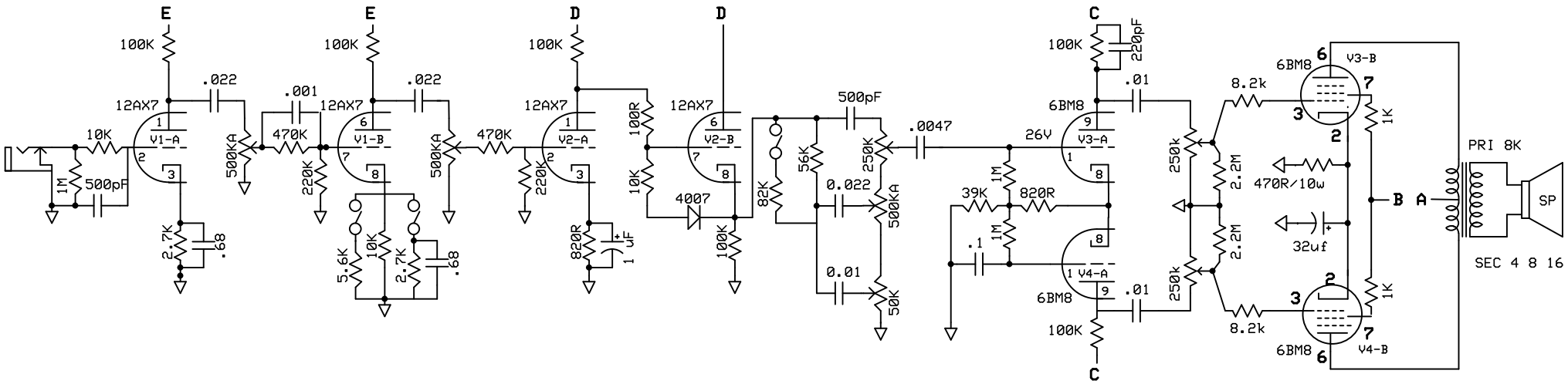

	1	2	3	4	5	6	7	8	9
V1	153		1.54	6.3	6.3	132		1.02	6.3
V1	135		0.86	6.3	6.3	248	138	145	6.3
V1	26	25		6.3	6.3	310	301	71	183
V1	26	25		6.3	6.3	310	301	71	174

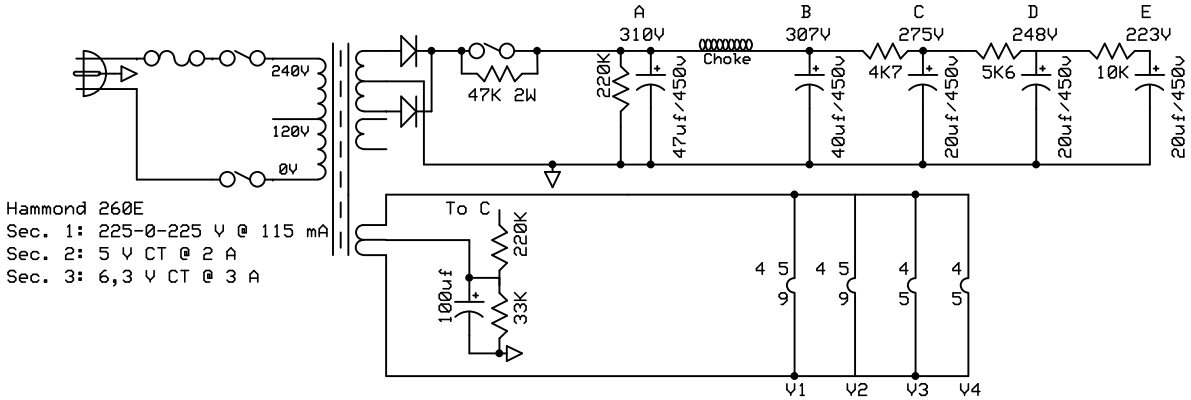

Hammond 260E
Sec. 1: 225-0-225 V @ 115 mA
Sec. 2: 5 V CT @ 2 A
Sec. 3: 6,3 V CT @ 3 A

AX84 SEL - 6BM8
Version: 1.3
Date: 11-2-2017