REVISIONS			
REV	DESCRIPTION	DATE	APPROVE

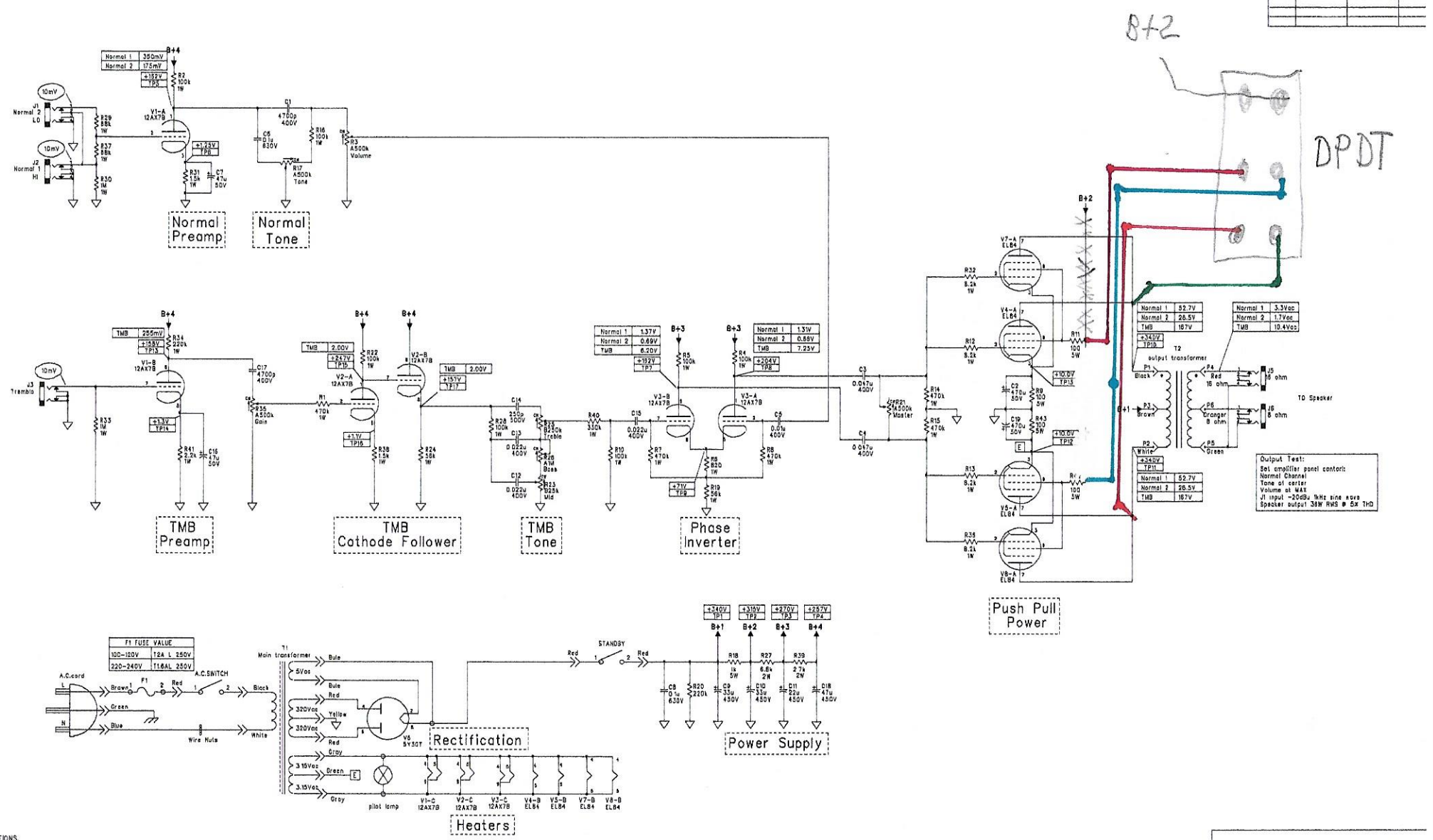

DITIONS.
STMENT - NO SIGNAL APPLIED,
ENT SHOULD BE ABOUT 95mA - 105mA TUBE (CLASS AB) VALUES.

ATED LINE VOLTAGE.
ESISTIVE LOAD CONNECTED AT SPEAKER OUT
L CONTROLS AT 50% ROTATION
OLTAGES MEASURED WITH NO INPUT SIGNAL
OLTAGE MEASURED WITH A 10mVAC 1kHz SINEWAVE AT JK1 OR JK2 OR JK3.

LESS OTHERWISE NOTED)

	NAME	DATE
DRAWN	[illegible]	2008-10-30
CHECKED		
APPROVED		

AXL Musical Instruments

TITLE: AV-HW-36

SIZE: D | DRAWING NUMBER: TA 032018201 | REV: 1.0

SHEET 1 OF 1

ated with pdfFactory Pro trial version www.pdffactory.com