THIS PRODUCT MANUFACTURED UNDER ONE OR MORE OF THE FOLLOWING U.S. PATENTS# 2817708, 2973681, 192859 AND PATENTS PENDING.

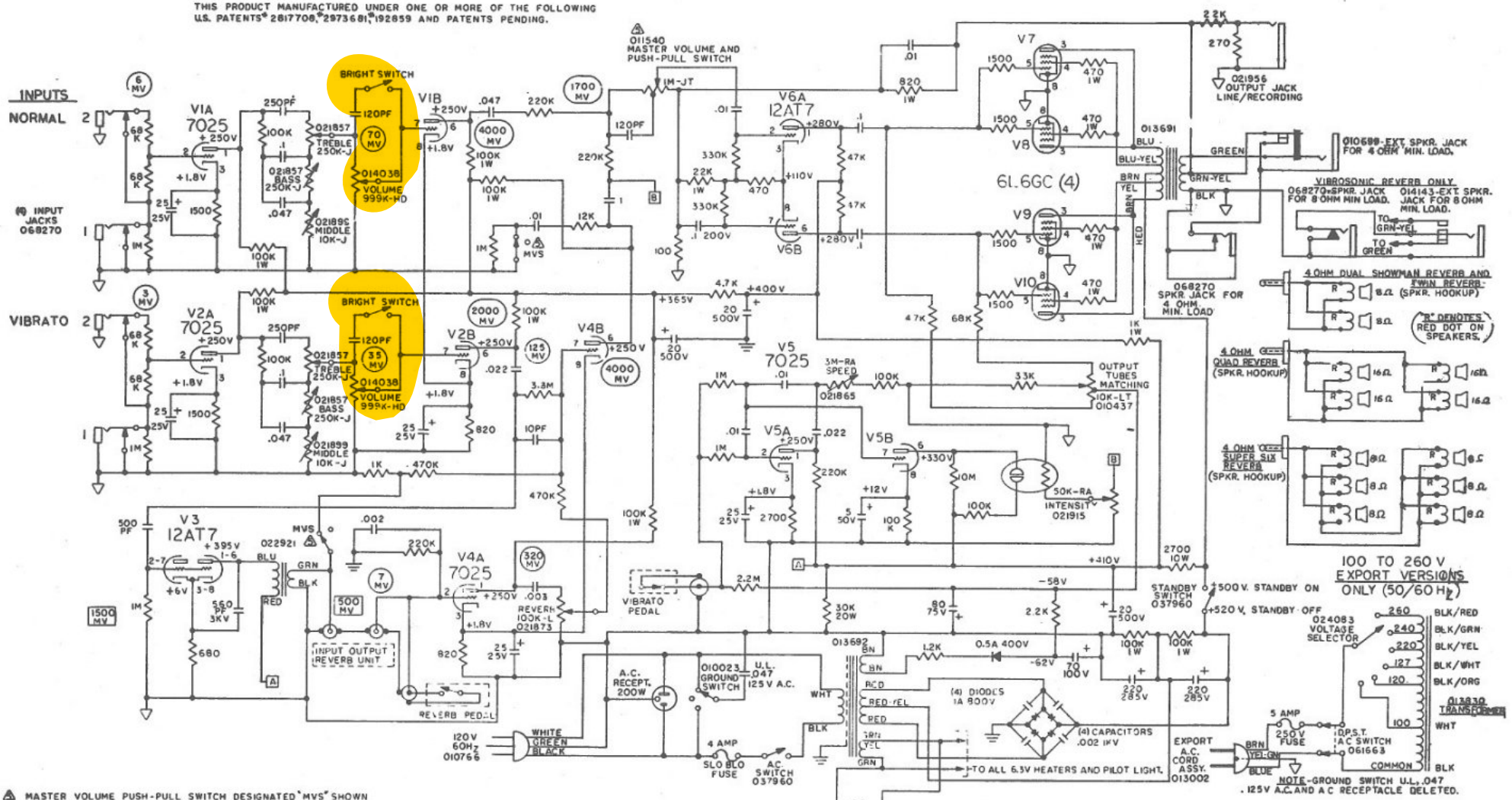

⚠ MASTER VOLUME PUSH-PULL SWITCH DESIGNATED "MVS" SHOWN IN "OUT" POSITION. PUSH IN FOR PURE SOUND.

(MV) DENOTE TYPICAL 1KHZ SIGNAL REQUIRED FOR 10 WATT OUTPUT AND 500MV REVERB INPUT COIL DRIVE.

4. SIX DIGIT NUMBERS ARE FENDER PART NUMBERS.
3. ALL CAPACITORS AT LEAST 600V, W.V.D.C.
2. ALL RESISTORS 1/2 WATT ±10%.
1. VOLTAGES READ TO GROUND WITH V.T.V.M. NO SIGNAL. V5 (ONLY) VOLTAGES READ WITH SPEED & INTENSITY MAX. & VIBRATO ON.

NOTE: UNLESS OTHERWISE SPECIFIED

CAUTION:

500 VOLTS AVAILABLE - DISCONNECT POWER SUPPLY AND ALLOW AT LEAST 30 SECONDS FOR VOLTAGES TO "BLEED" OFF, BEFORE SERVICING AMPLIFIER.

VIBROS. REV.
SUP. SIX REV.
QUAD REV.
D.S. REVERB
TWIN REV.
USED ON

Fender / Rogers / Rhodes

CBS MUSICAL INSTRUMENTS — A DIVISION OF CBS, INC. FULLERTON, CALIFORNIA 92631

PART NAME: SCHEMATIC 135 WATTS RMS AMP W/REVERB AND VIBRATO

PART NO. 013694