# FENDER MODEL "DELUXE REVERB-AMP AB763" SCHEMATIC

"BLACKFACE"

THIS PRODUCT MANUFACTURED UNDER ONE OR MORE OF THE FOLLOWING U.S. PATENTS
CIRCUIT PATENT #2817708, #2973681
DESIGN PATENT #192859

C-FD

NOTICE
1 - VOLTAGES READ TO GROUND WITH ELECTRONIC VOLTMETER VALUES SHOWN + OR - 20%
2 - ALL RESISTORS ½ WATT 10% TOLERANCE IF NOT SPECIFIED
3 - ALL CAPACITORS AT LEAST 400 VOLT RATING IF NOT SPECIFIED

Single Channel AB763, no vibrato, with master volume and VVR scaling for 6V6 tubes only.

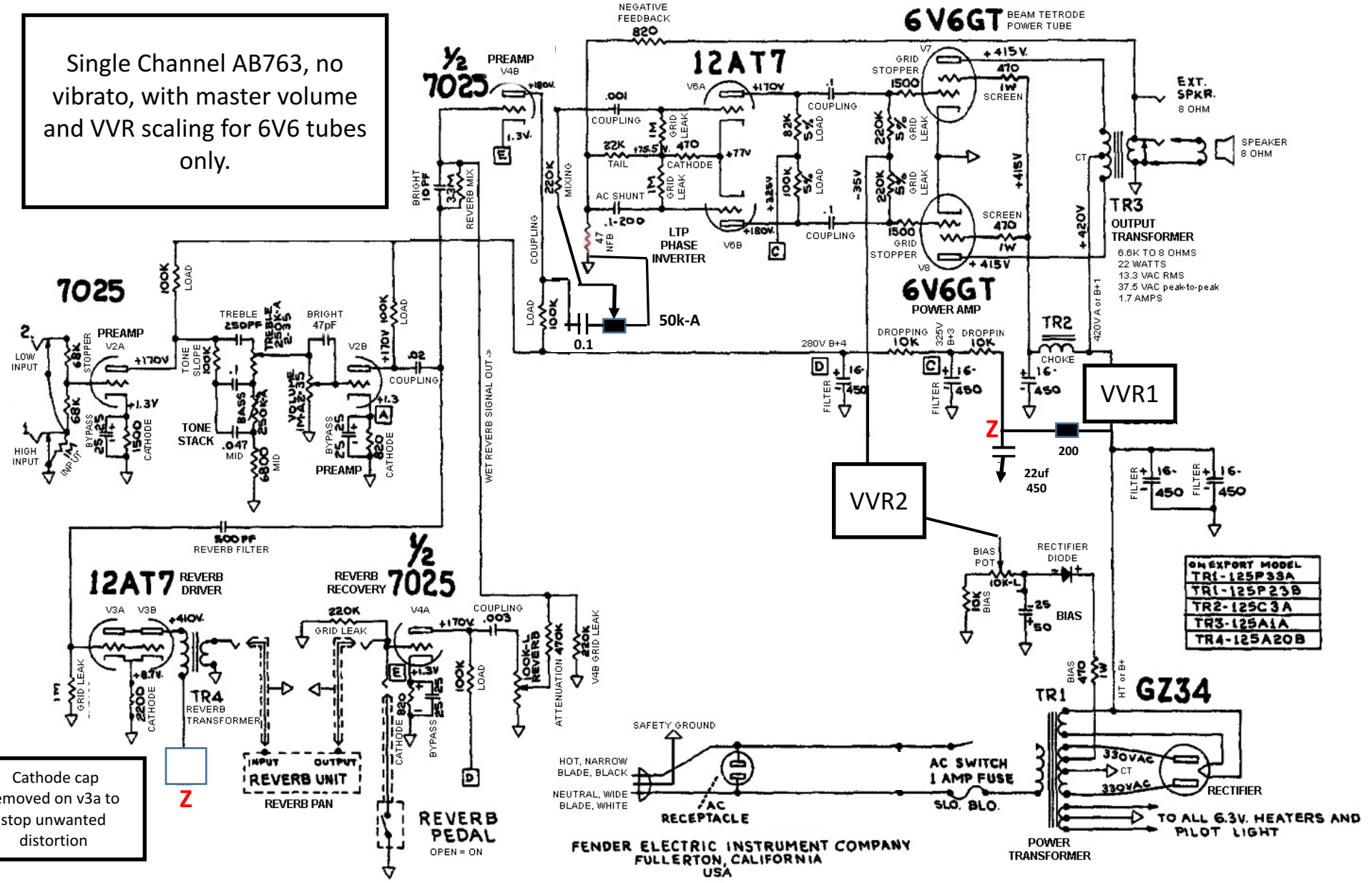


Cathode cap removed on v3a to stop unwanted distortion