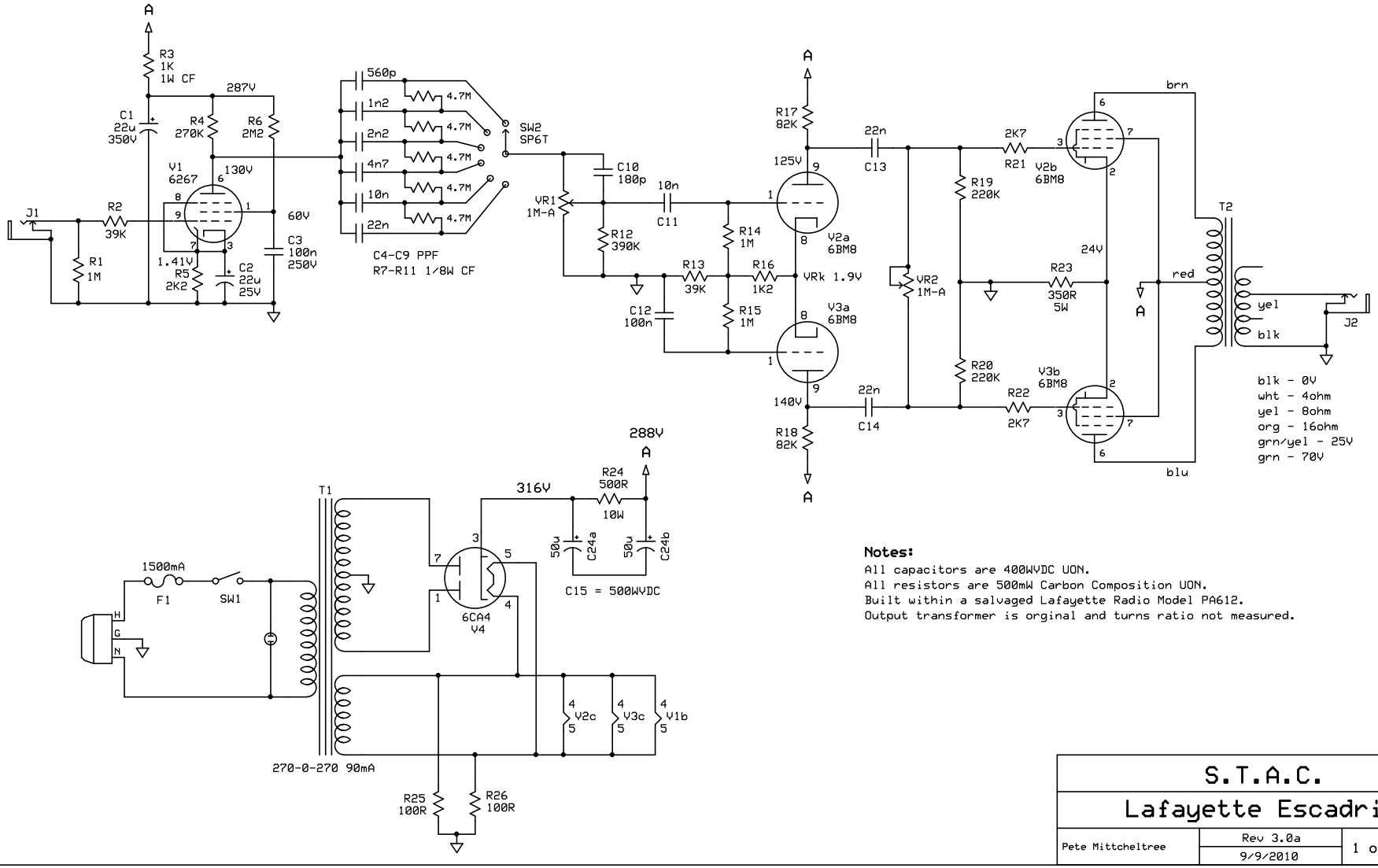


**Notes:**

All capacitors are 400WVDC UON.
All resistors are 500mW Carbon Composition UON.
Built within a salvaged Lafayette Radio Model PA612.
Output transformer is orginal and turns ratio not measured.

| | | |
|---|---|---|
| S.T.A.C. | | |
| Lafayette Escadrille | | |
| Pete Mittcheltree | Rev 3.0a<br>9/9/2010 | 1 of 1 |