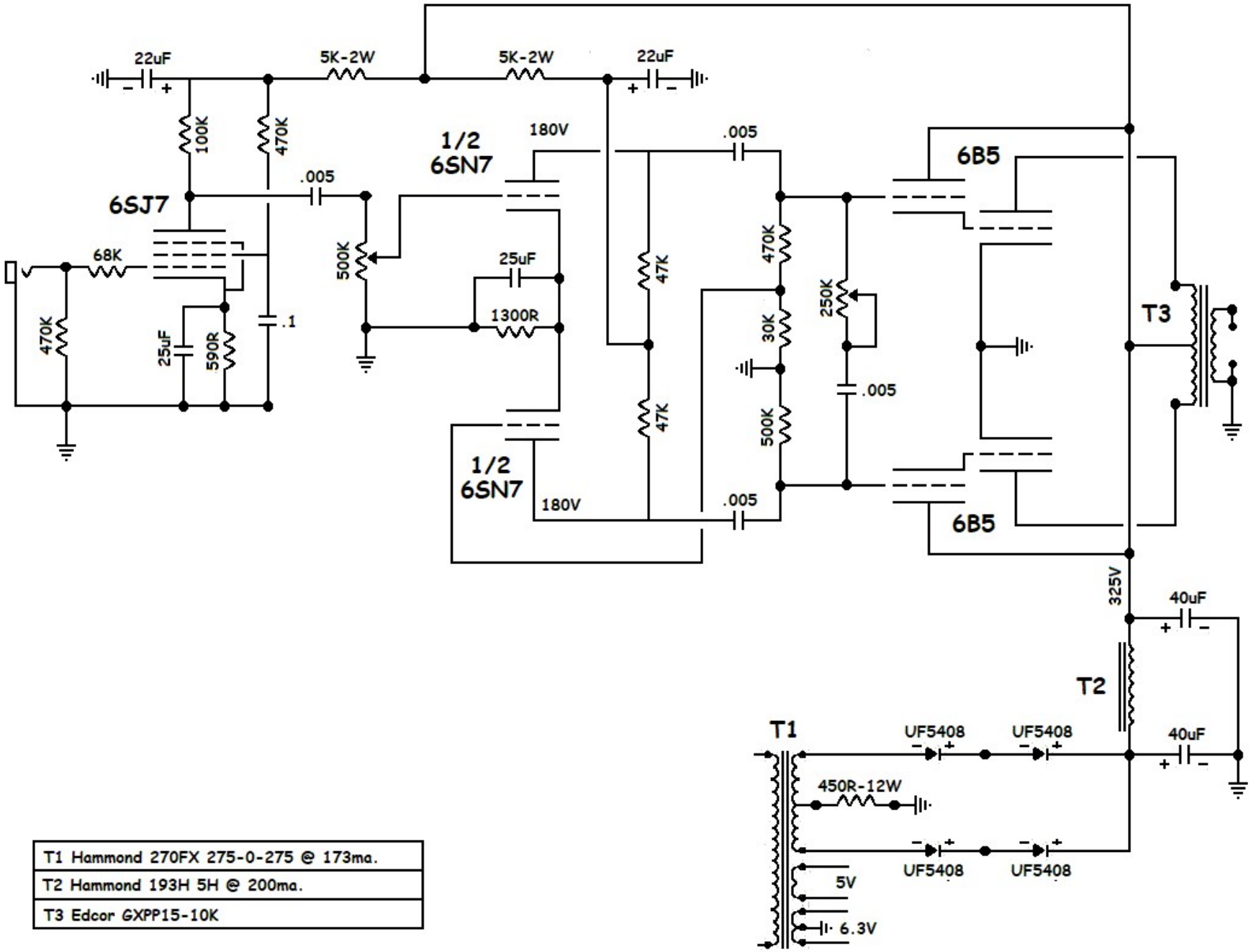

T1 Hammond 270FX 275-0-275 @ 173ma.
T2 Hammond 193H 5H @ 200ma.
T3 Edcor GXPP15-10K