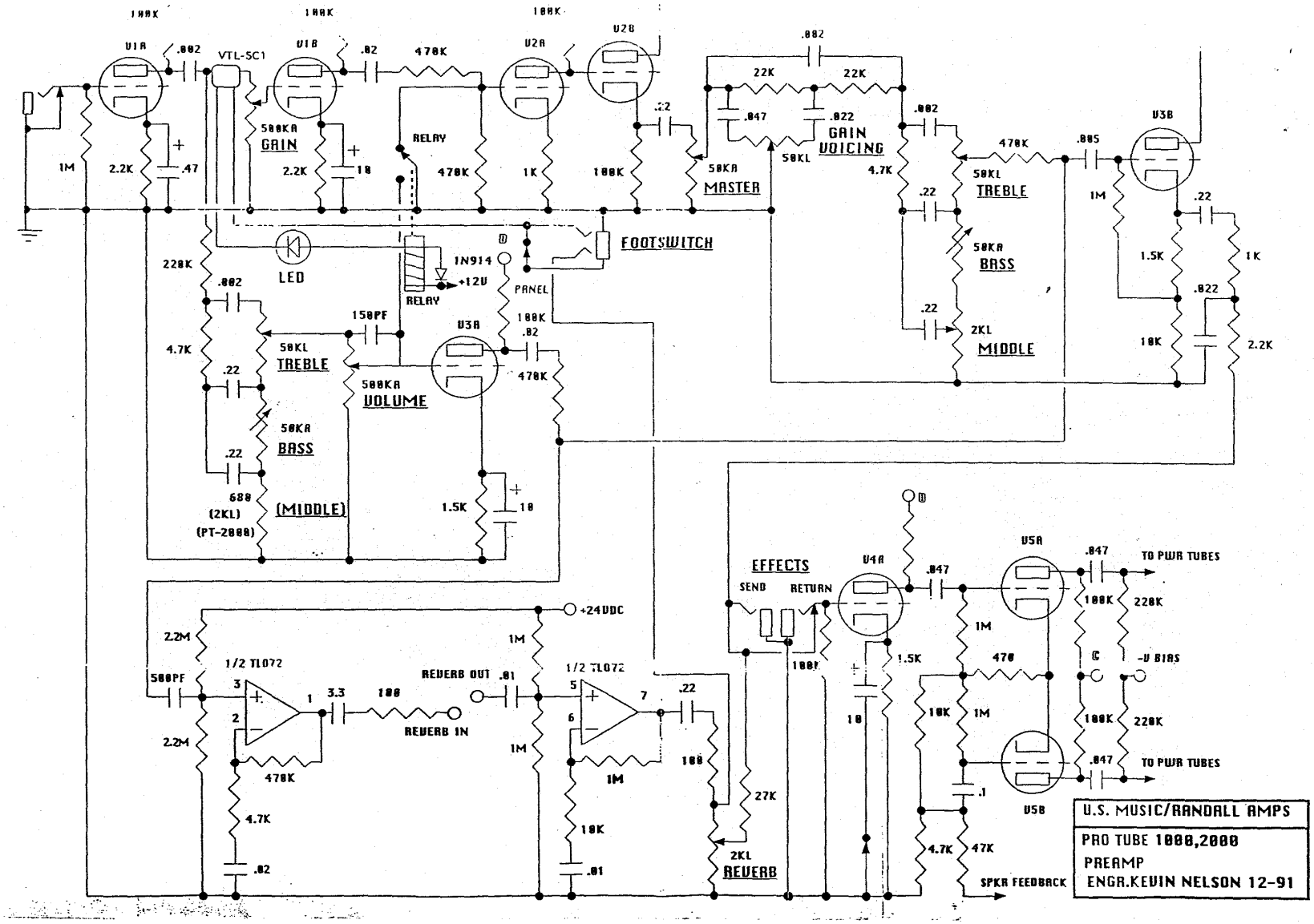
100K
100K
100K
V1A
.002
VTL-5C1
V1B
.02
470K
V2A
V2B
.22
.002
22K
22K
.047
.022
GAIN
VOICING
50KL
4.7K
470K
.005
V3B
1M
2.2K
.47
500KA
GAIN
2.2K
10
RELAY
470K
1K
100K
50KA
MASTER
50KL
TREBLE
1M
.22
1.5K
1K
.022
10K
2.2K
FOOTSWITCH
LED
220K
.002
1N914
+12V
RELAY
PANEL
50KA
BASS
.22
2KL
MIDDLE
150PF
100K
.02
4.7K
50KL
TREBLE
V3A
470K
500KA
VOLUME
50KA
BASS
.22
680
(2KL)
(PT-2000)
(MIDDLE)
1.5K
10
EFFECTS
SEND
RETURN
V4A
.047
V5A
.047
TO PWR TUBES
100K
220K
+24VDC
2.2M
1M
1.5K
470
C
-V BIAS
500PF
1/2 TL072
3
2
1
3.3
100
REVERB OUT
.01
1/2 TL072
5
6
7
.22
REVERB IN
10
10K
1M
100K
220K
2.2M
470K
1M
100
.047
TO PWR TUBES
4.7K
1M
27K
.1
V5B
10K
.01
2KL
REVERB
4.7K
47K
.02
SPKR FEEDBACK
U.S. MUSIC/RANDALL AMPS
PRO TUBE 1000,2000
PREAMP
ENGR.KEVIN NELSON 12-91