Robert Hufl 2014
tech@tubedepot.com

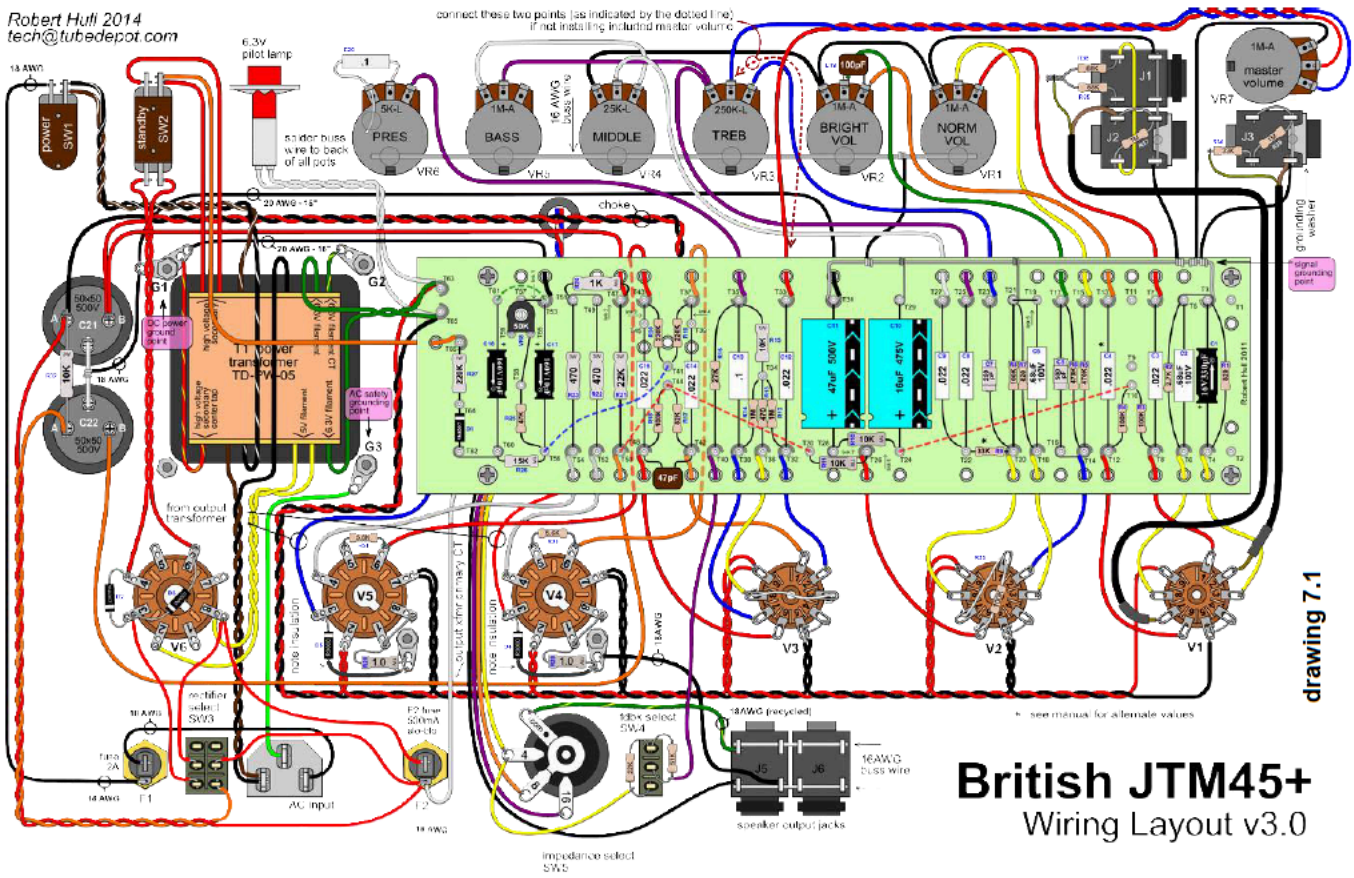

British JTM45+

Wiring Layout v3.0