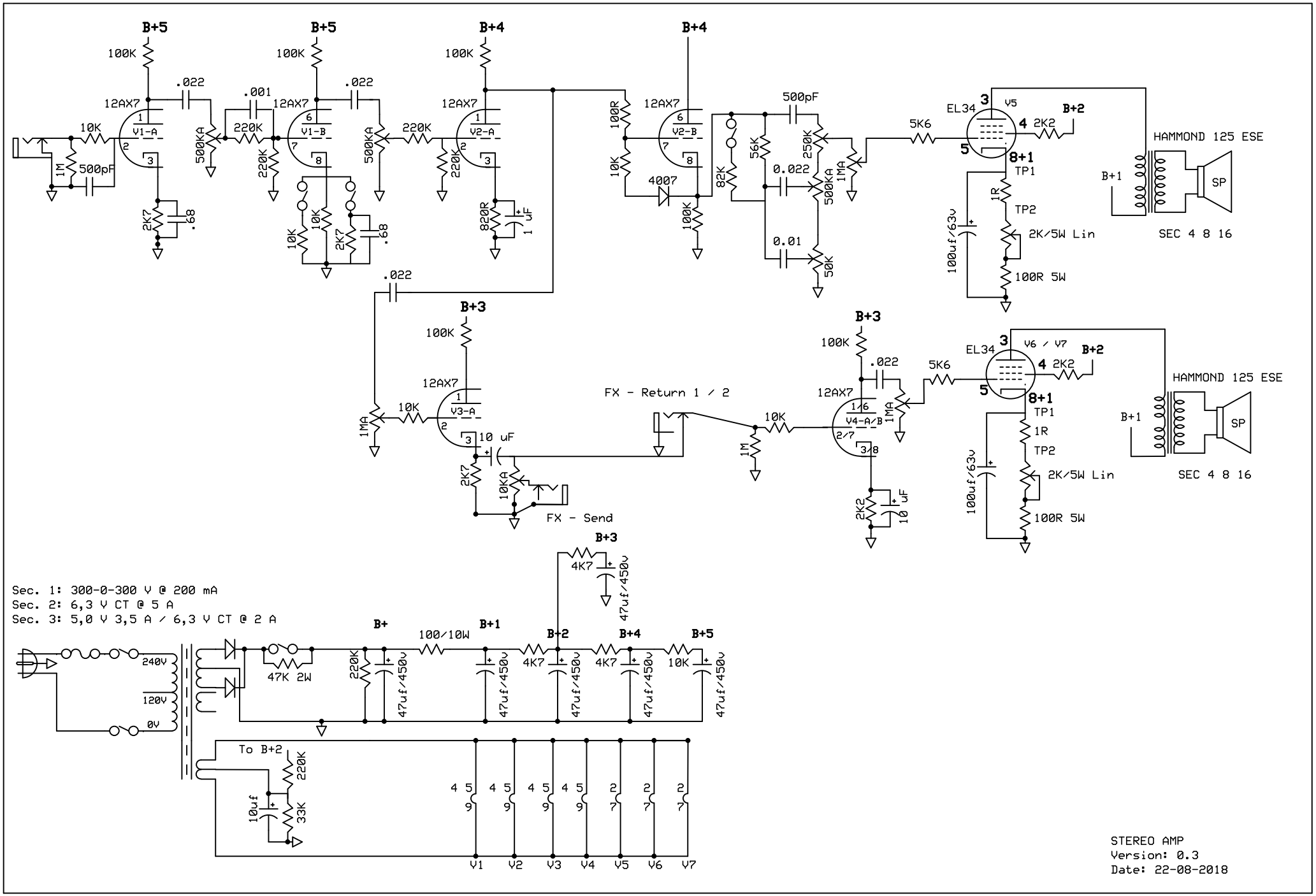
B+5
B+4
B+3
B+2
B+1
B+
100K
10K
1M
500pF
.022
.001
12AX7
V1-A
V1-B
V2-A
V2-B
V3-A
V4-A/B
500KA
220K
2K7
.68
820R
1 uF
100R
4007
82K
56K
250K
0.022
0.01
50K
1MA
5K6
EL34
V5
V6 / V7
2K2
HAMMOND 125 ESE
SP
SEC 4 8 16
TP1
TP2
1R
2K/5W Lin
100R 5W
100uf/63v
FX - Return 1 / 2
FX - Send
10 uF
10KA
4K7
47uf/450v
Sec. 1: 300-0-300 V @ 200 mA
Sec. 2: 6,3 V CT @ 5 A
Sec. 3: 5,0 V 3,5 A / 6,3 V CT @ 2 A
240V
120V
0V
47K 2W
100/10W
To B+2
33K
V1
V2
V3
V4
V5
V6
V7
STEREO AMP
Version: 0.3
Date: 22-08-2018