CAPACITOR, DIODE, RESISTOR, POT, AND TUBE NUMBERING NOTE:

GAPS HAVE BEEN LEFT IN THE CAPACITOR, DIODE, RESISTOR, POTENTIOMETER, AND TUBE NUMBERING IN ORDER TO MAINTAIN CONSISTENCY BETWEEN THE P1, HIGH OCTANE, AND P1 EXTREME AMPS. A MISSING COMPONENT INDICATES THAT IT IS NOT USED ON THAT AMP, BUT IS USED ON ANOTHER.

RADIO NOISE NOTE:

IN THE UNLIKELY EVENT YOUR AMP STARTS PICKING UP RADIO STATIONS, YOU CAN INSTALL A GRID RESISTOR ON PIN 7 OF V4B. THE VALUE SHOULD BE BETWEEN 10K AND 68K. THE HIGHER THE VALUE, THE LESS RADIO NOISE AND THE LOWER THE VALUE, THE LESS POWER SUPPLY NOISE.

Revision	Description
08.07.29	Corrected Value Of R11 On BOM
10.03.18	Added Radial Cap Layout To Documents
10.06.16	Updated Hammond PT Hookup
10.10.04	Clarified 5V Taps On Chassis Layout

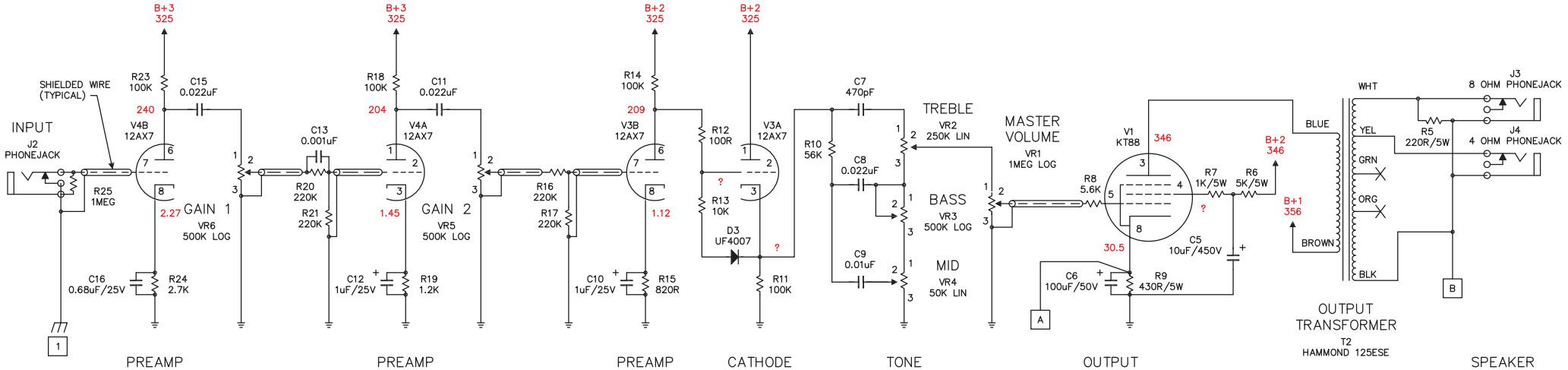

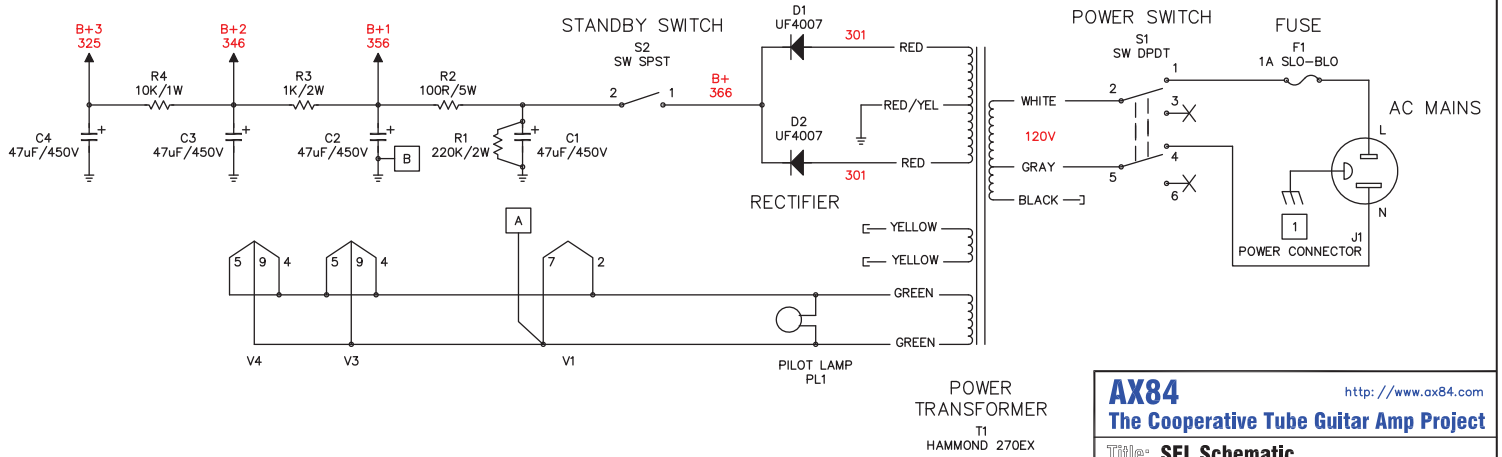

AX84 http://www.ax84.com

The Cooperative Tube Guitar Amp Project

Title: **SEL Schematic**

Sheet 1 Of 2 | Revision: 10.10.04