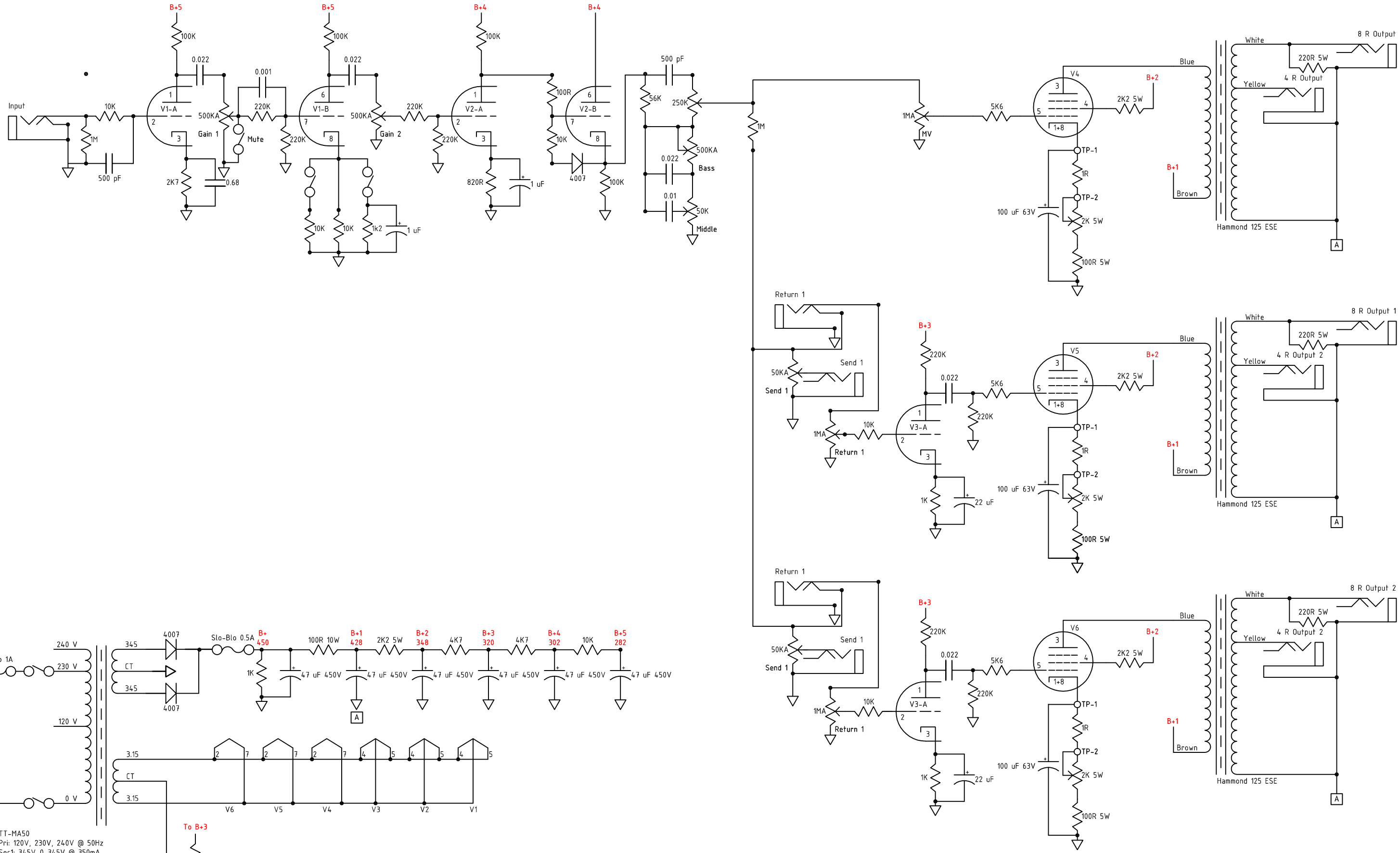

Stereo amp
Version: 1.0
Date: 27-08-2018

Shown voltages are estimates

V1, V2, V3: 12AX7
V4, V5, V6: EL34