Radiomuseum.org: Magnavox Co., Commercial Wireless and Development Co.; San Francisco, later Fort Waye, IN Ch= AMP-142AB

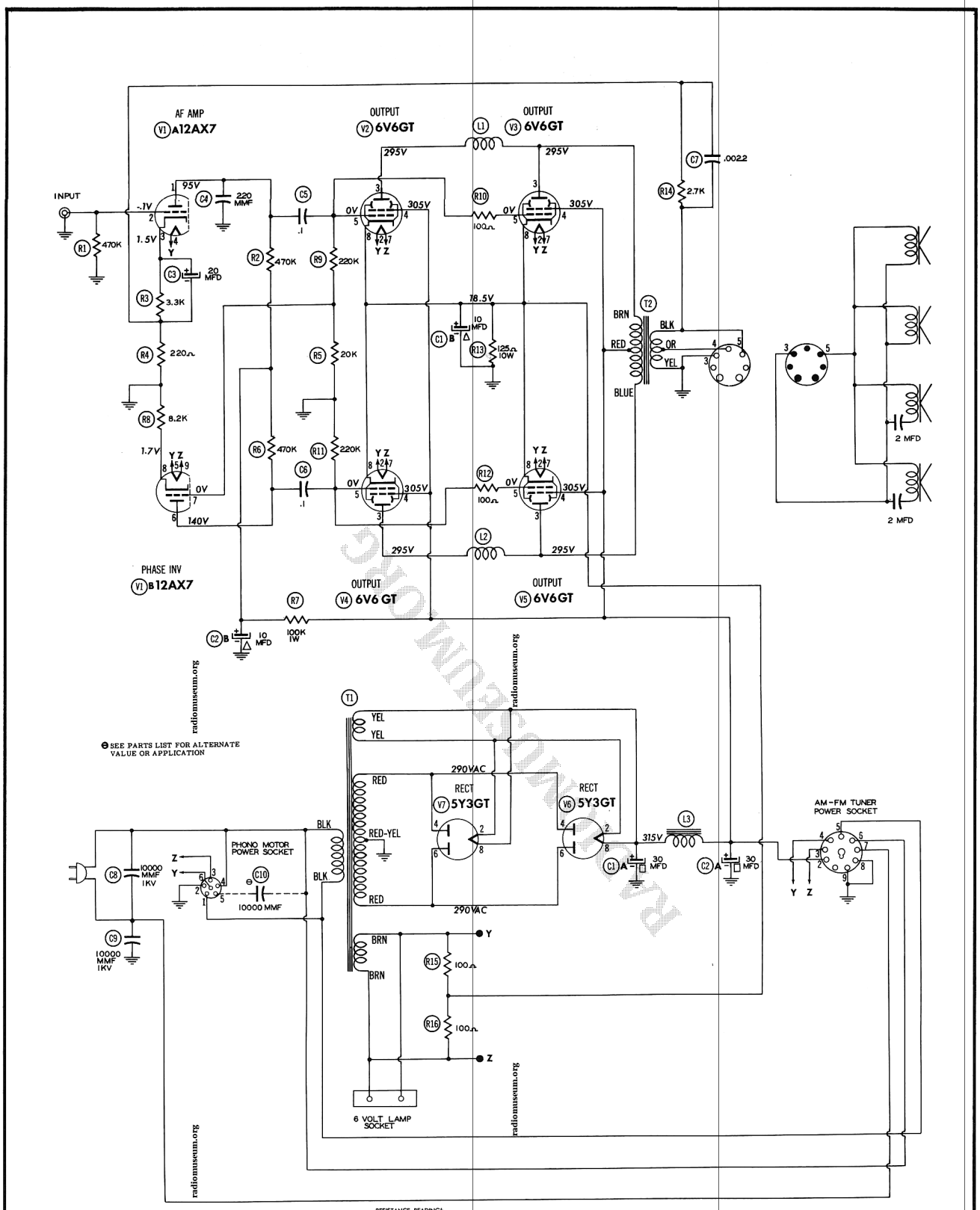

RESISTANCE READINGS

Item	Tube	Pin 1	Pin 2	Pin 3	Pin 4	Pin 5	Pin 6	Pin 7	Pin 8	Pin 9
V 1	12AX7	† 570KΩ	470KΩ	3.5KΩ	175Ω	175Ω	† 570KΩ	20KΩ	8.2KΩ	175Ω
V 2	6V6GT	NC	175Ω	† 150Ω	† 50Ω	240KΩ	TP	175Ω	125Ω	
V 3	6V6GT	NC	175Ω	† 150Ω	† 50Ω	240KΩ	NC	175Ω	125Ω	
V 4	6V6GT	NC	175Ω	† 150Ω	† 50Ω	220KΩ	TP	175Ω	125Ω	
V 5	6V6GT	NC	175Ω	† 150Ω	† 50Ω	220KΩ	NC	175Ω	125Ω	
V 6	5Y3GT	NC	70KΩ	NC	22Ω	NC	22Ω	NC	70KΩ	
V 7	5Y3GT	NC	70KΩ	NC	22Ω	NC	22Ω	NC	70KΩ	

† MEASURED FROM PIN 8 OF V7.
NC-NO CONNECTION.
TP-TIE POINT.

THE COOPERATION OF THE MANUFACTURER OF THIS EQUIPMENT MAKES IT POSSIBLE TO BRING YOU THIS SERVICE

1. DC voltage measurements taken with vacuum tube voltmeter; AC voltages measured at 1000 ohms per volt.
2. Socket connections are shown as bottom views.
3. Measured values are from socket pin to common negative.
4. Line voltage maintained at 117 volts for voltage readings.
5. Nominal tolerance on component values makes possible a variation of ± 15% in voltage and resistance readings.
6. All controls at minimum, proper output load connected.

A PHOTOFACT STANDARD NOTATION SCHEMATIC
© Howard W. Sams & Co., Inc. 1956

www.radiomuseum.org; upload by Dirk Taekels; download by Steve Luckey Sat Sep 01 20:34:32 CEST 2018 [3224 x 2225, 201kb]