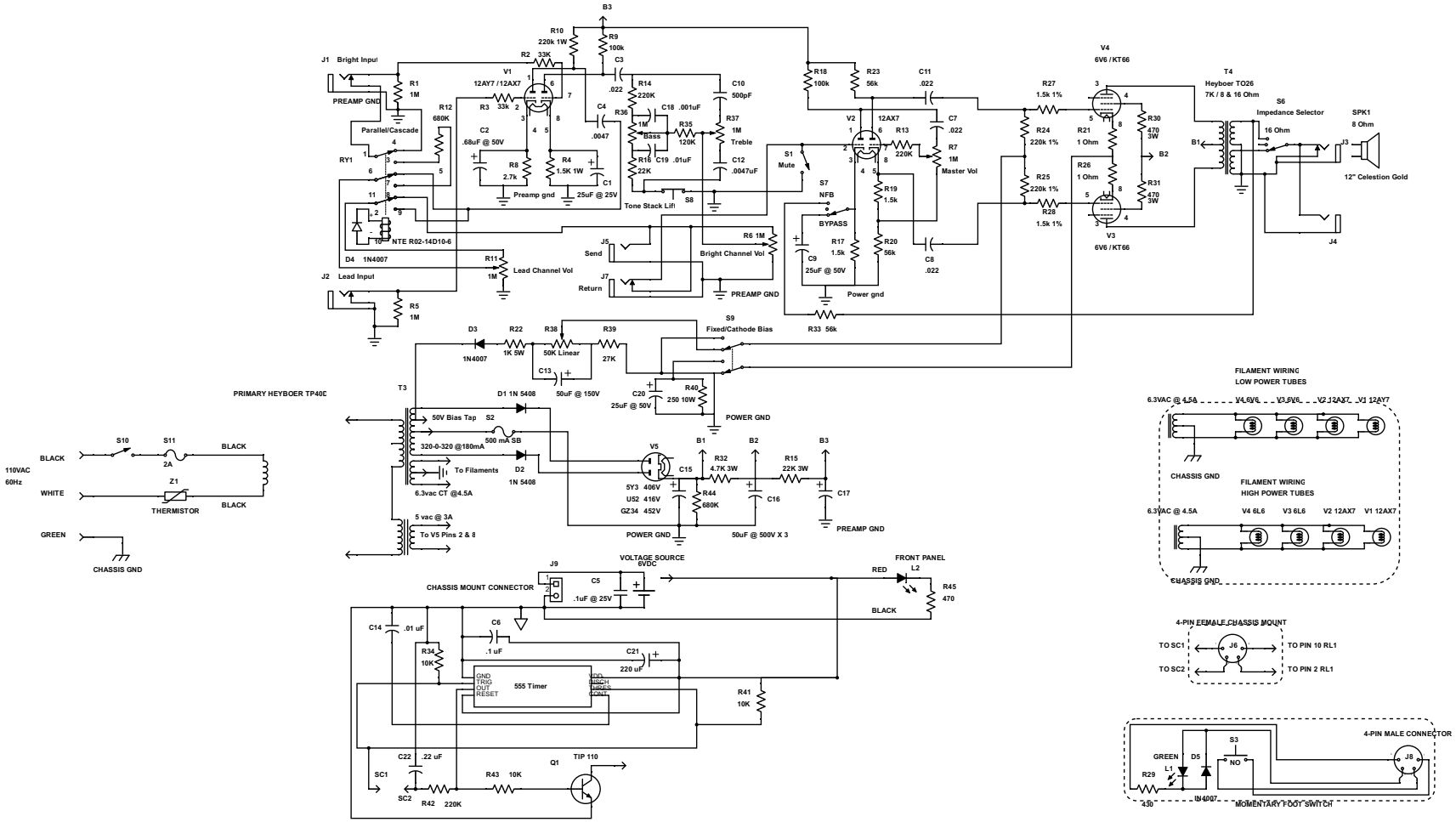
B3
R10
220k 1W
R9
100k
J1 Bright Input
R1
1M
PREAMP GND
R2 33K
V1
12AY7 /12AX7
C3
.022
R14
220K
C10
500pF
R18
100k
R23
56k
C11
.022
V4
6V6 /KT66
R27
1.5k 1%
T4
Heyboer TO26
7K / 8 & 16 Ohm
S6
Impedance Selector
SPK1
8 Ohm
Parallel/Cascade
R12
680K
R3 33k
C4
.0047
R36
1M
C18 .001uF
R35
120K
Bass
R37
1M
Treble
V2
12AX7
R13
220K
C7
.022
R24
220k 1%
R21
1 Ohm
R30
470
3W
16 Ohm
B1
B2
J3
12" Celestion Gold
RY1
C2
.68uF @ 50V
R8
2.7k
R4
1.5K 1W
C1
25uF @ 25V
Preamp gnd
R16
22K
C19 .01uF
C12
.0047uF
S1
Mute
R7
1M
Master Vol
R26
1 Ohm
R31
470
3W
Tone Stack Lift
S8
S7
NFB
BYPASS
R19
1.5k
R25
220k 1%
R28
1.5k 1%
V3
6V6 /KT66
J4
NTE R02-14D10-6
D4 1N4007
R11
1M
Lead Channel Vol
J5
Send
J7
Return
R6 1M
Bright Channel Vol
C9
25uF @ 50V
R17
1.5k
R20
56k
C8
.022
PREAMP GND
Power gnd
J2 Lead Input
R5
1M
R33 56k
D3
1N4007
R22
1K 5W
R38
50K Linear
R39
27K
S9
Fixed/Cathode Bias
C13
50uF @ 150V
D1 1N 5408
C20
25uF @ 50V
R40
250 10W
POWER GND
PRIMARY HEYBOER TP40D
T3
50V Bias Tap
S2
500 mA SB
320-0-320 @180mA
To Filaments
D2
1N 5408
6.3vac CT @4.5A
5 vac @ 3A
To V5 Pins 2 & 8
V5
5Y3 406V
U52 416V
GZ34 452V
B1
B2
B3
R32
4.7K 3W
R15
22K 3W
C15
R44
680K
C16
C17
POWER GND
50uF @ 500V X 3
PREAMP GND
110VAC
60Hz
BLACK
WHITE
GREEN
S10
S11
2A
BLACK
Z1
THERMISTOR
BLACK
CHASSIS GND
FILAMENT WIRING
LOW POWER TUBES
6.3VAC @ 4.5A
V4 6V6
V3 6V6
V2 12AX7
V1 12AX7
CHASSIS GND
FILAMENT WIRING
HIGH POWER TUBES
6.3VAC @ 4.5A
V4 6L6
V3 6L6
V2 12AX7
V1 12AX7
CHASSIS GND
J9
CHASSIS MOUNT CONNECTOR
VOLTAGE SOURCE
6VDC
C5
.1uF @ 25V
FRONT PANEL
RED
L2
R45
470
BLACK
C14 .01 uF
C6
.1 uF
R34
10K
C21
220 uF
555 Timer
GND
TRIG
OUT
RESET
VDD
DISCH
THRES
CONT
R41
10K
C22 .22 uF
SC1
SC2
R42 220K
R43 10K
Q1
TIP 110
4-PIN FEMALE CHASSIS MOUNT
TO SC1
TO SC2
J6
TO PIN 10 RL1
TO PIN 2 RL1
4-PIN MALE CONNECTOR
S3
GREEN
D5
NO
J8
L1
R29
430
1N4007
MOMENTARY FOOT SWITCH