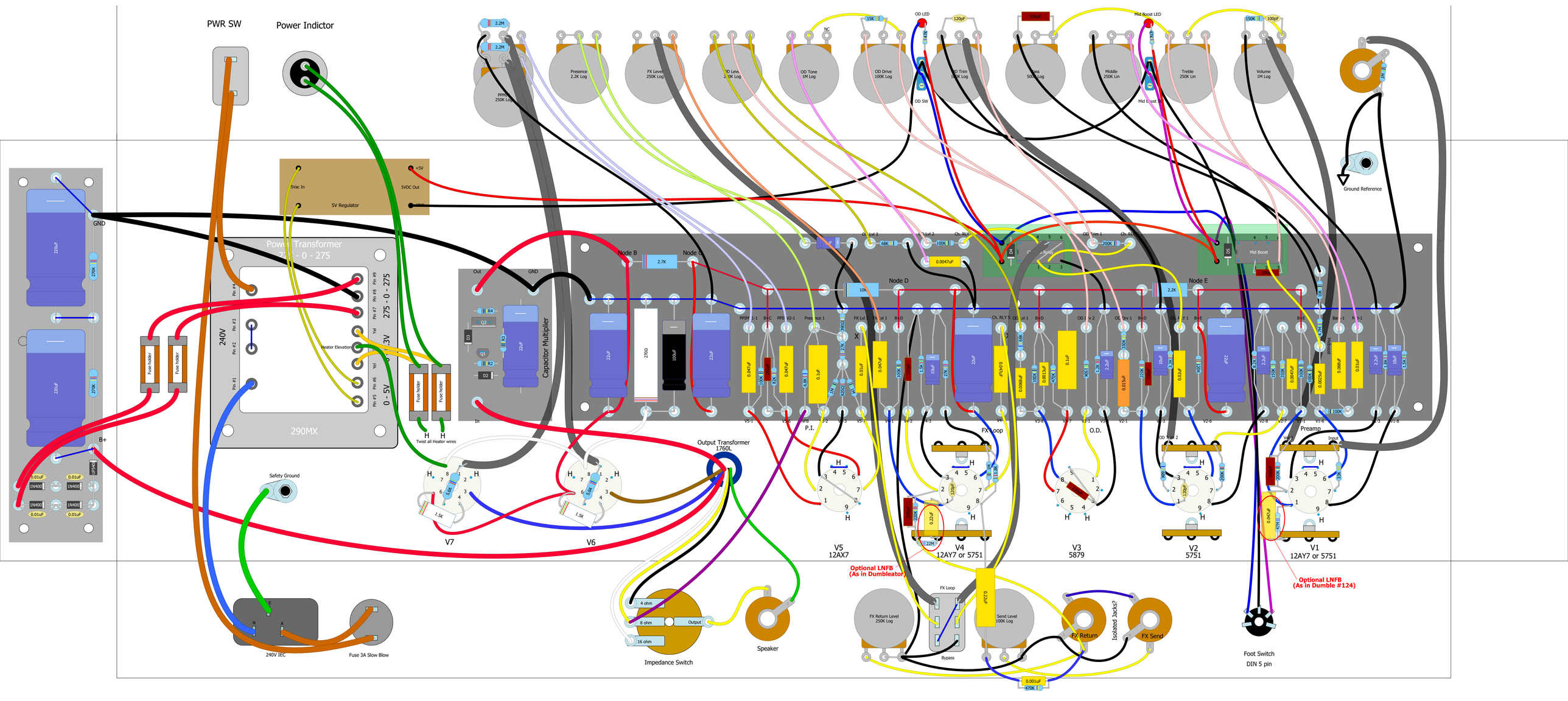
PWR SW
Power Indictor
Presence 2.2K Log
FX Level 250K Log
OD Level 2.2K Log
OD Tone 1M Log
OD Drive 100K Log
OD Trim 100K Log
Bass 500K Log
Middle 250K Lin
Treble 250K Lin
Volume 1M Log
OD LED
OD SW
Mid Boost LED
Mid Boost SW
Ground Reference
5V Regulator
5Vac In
5VDC Out
Power Transformer
275 - 0 - 275
290MX
240V
0 - 5V
Heater Elevation
Fuse holder
Twist all Heater wires
Capacitor Multiplier
Node B
Node D
Node E
P.I.
FX Loop
O.D.
Preamp
Output Transformer
1760L
Safety Ground
240V IEC
Fuse 3A Slow Blow
Impedance Switch
Speaker
V7
V6
V5
12AX7
V4
12AY7 or 5751
V3
5879
V2
5751
V1
12AY7 or 5751
Optional LNFB
(As in Dumbleator)
Optional LNFB
(As in Dumble #124)
FX Return Level
250K Log
FX Send Level
100K Log
FX Return
FX Send
Isolated Jacks?
Bypass
Foot Switch
DIN 5 pin