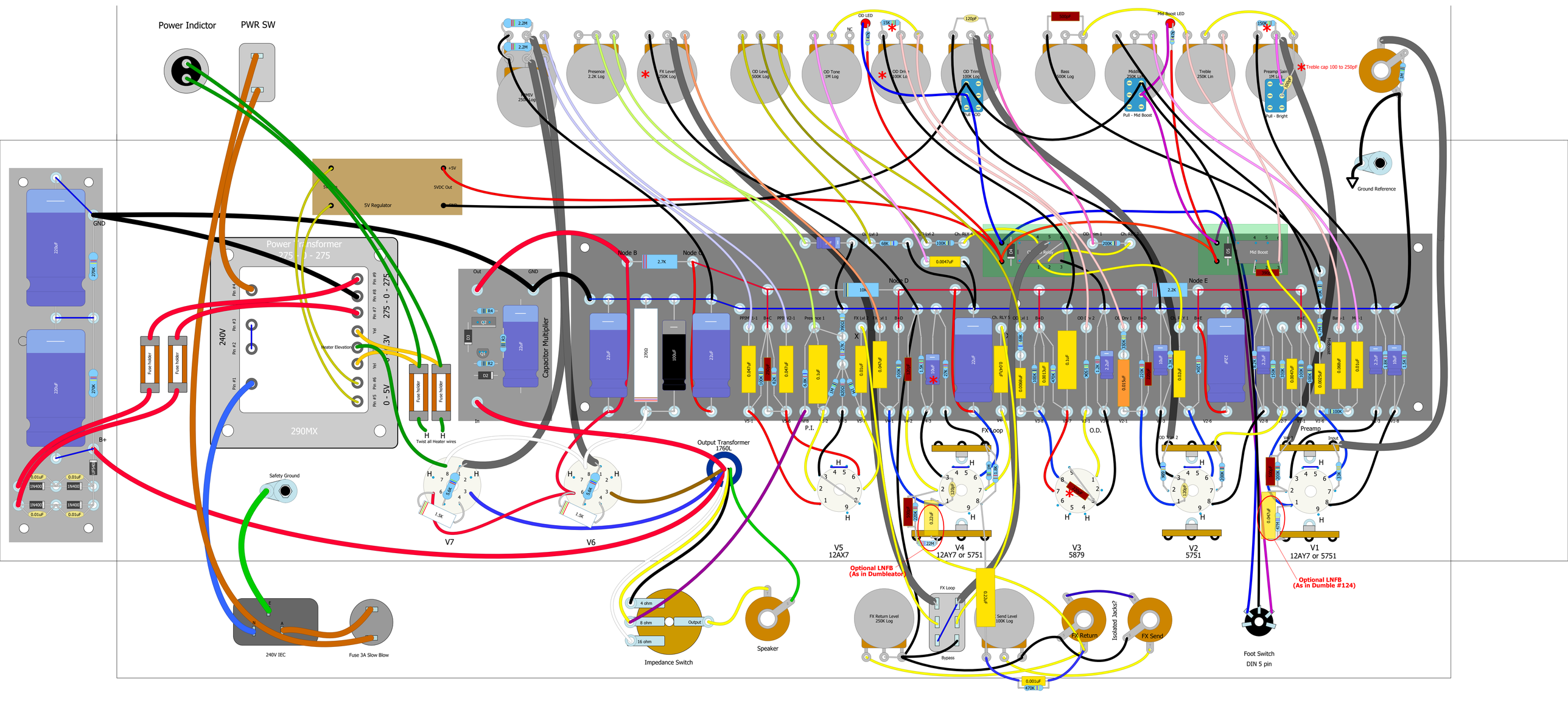
Power Indictor
PWR SW
GND
B+
Power Transformer
275 - 0 - 275
240V
0 - 5V
290MX
Heater Elevation
Twist all Heater wires
Fuse holder
Safety Ground
240V IEC
Fuse 3A Slow Blow
5V Regulator
5VDC Out
Capacitor Multiplier
Output Transformer
1760L
Impedance Switch
4 ohm
8 ohm
16 ohm
Output
Speaker
V7
V6
V5
12AX7
V4
12AY7 or 5751
V3
5879
V2
5751
V1
12AY7 or 5751
P.I.
FX Loop
O.D.
Preamp
Node B
Node C
Node D
Node E
Presence
FX Level
OD Level
OD Tone
OD Drive
OD Trim
Bass
Middle
Treble
Preamp Gain
Treble cap 100 to 250pF
Pull - OD
Pull - Mid Boost
Pull - Bright
Mid Boost
Ground Reference
Optional LNFB
(As in Dumbleator)
Optional LNFB
(As in Dumble #124)
FX Return Level
FX Send Level
FX Return
FX Send
Isolated Jacks?
Bypass
Foot Switch
DIN 5 pin