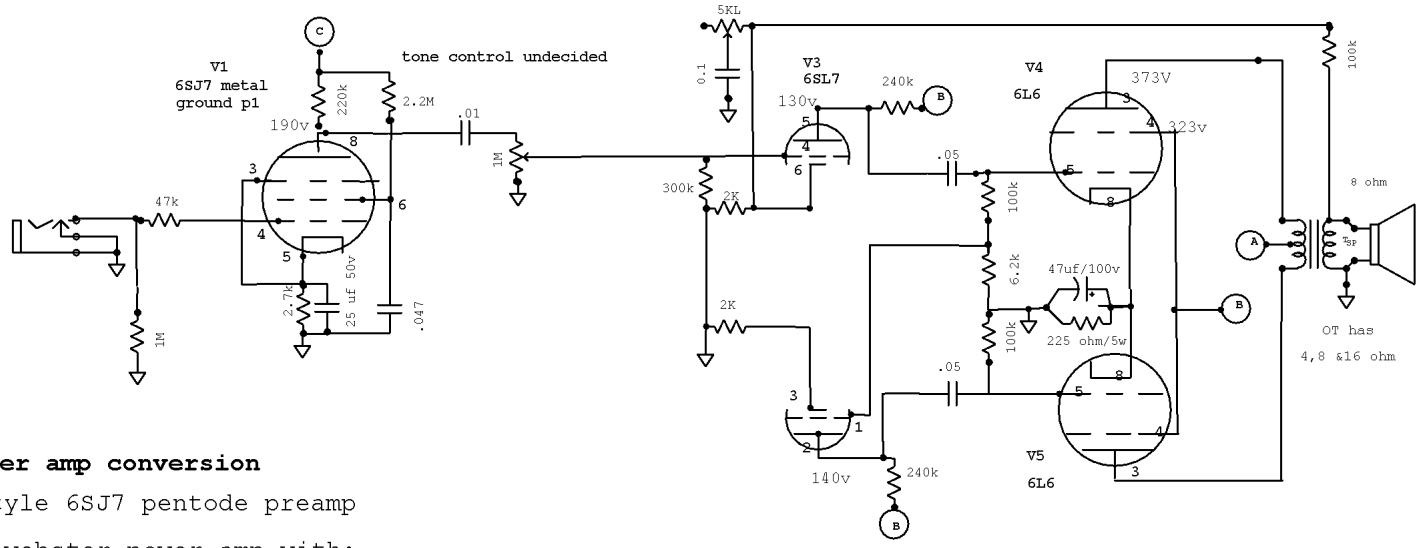

Webster amp conversion

Gibson style 6SJ7 pentode preamp

Original webster power amp with:

Negative feedback resistor increased from 16K to 100K
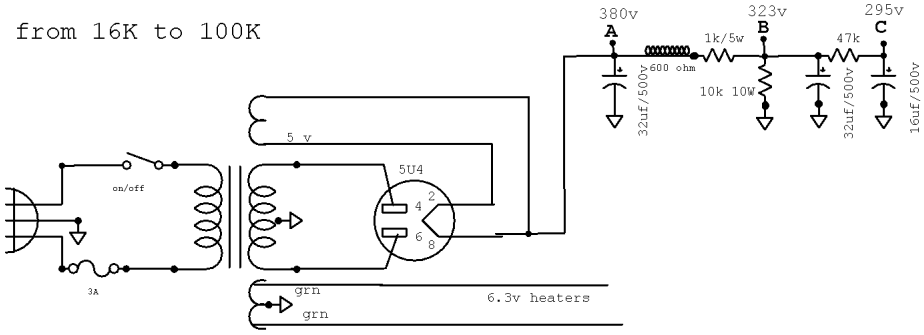
Tweed style presence control added