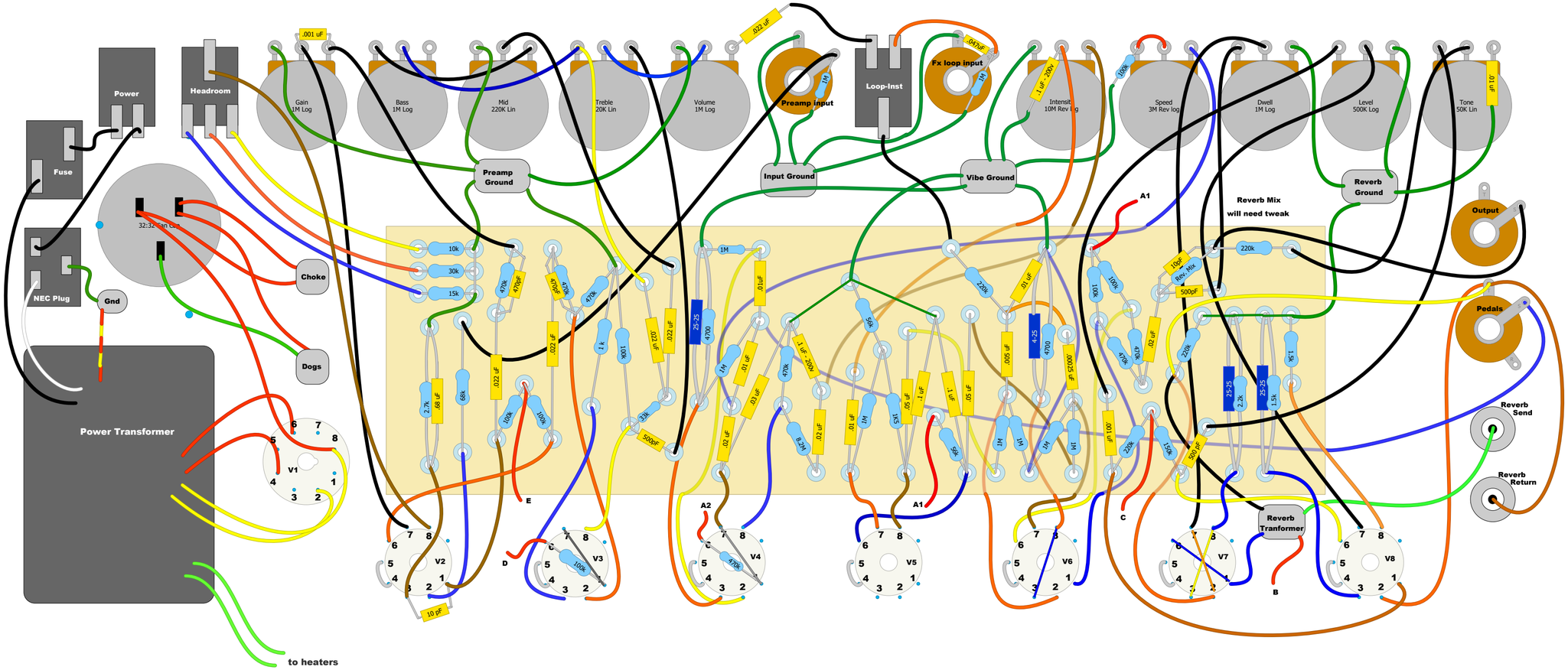
Power
Headroom
Fuse
NEC Plug
Gnd
Power Transformer
Choke
Dogs
to heaters
Gain 1M Log
Bass 1M Log
Mid 220K Lin
Treble 20K Lin
Volume 1M Log
Preamp input
Loop-inst
Fx loop input
Intensit 10M Rev Log
Speed 3M Rev log
Dwell 1M Log
Level 500K Log
Tone 50K Lin
Preamp Ground
Input Ground
Vibe Ground
Reverb Ground
Reverb Mix
will need tweak
Output
Pedals
Reverb Send
Reverb Return
Reverb Tranformer
V1
V2
V3
V4
V5
V6
V7
V8

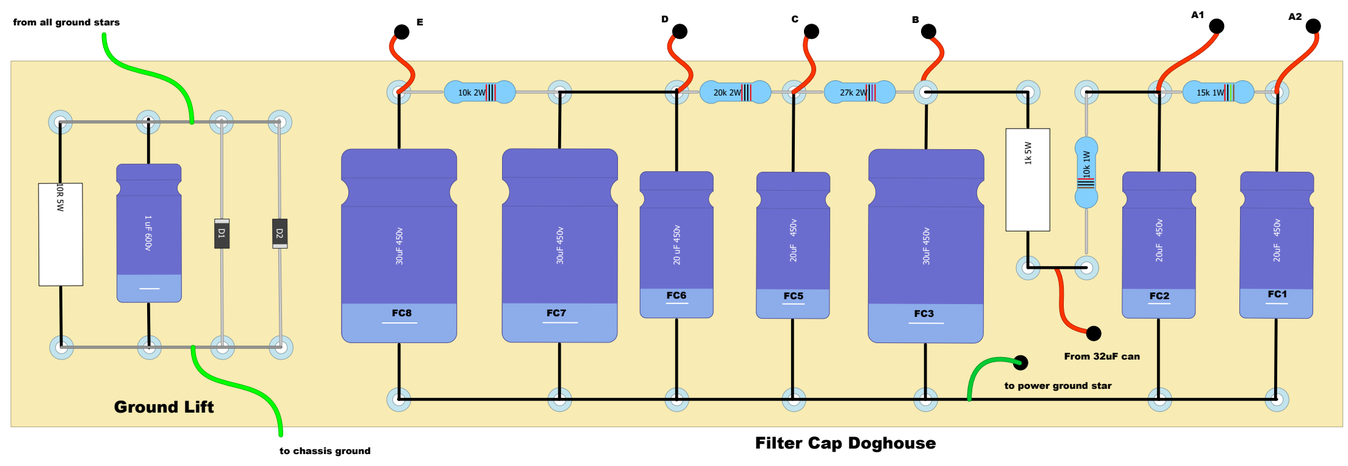
from all ground stars
Ground Lift
to chassis ground
FC8
FC7
FC6
FC5
FC3
FC2
FC1
From 32uF can
to power ground star
Filter Cap Doghouse