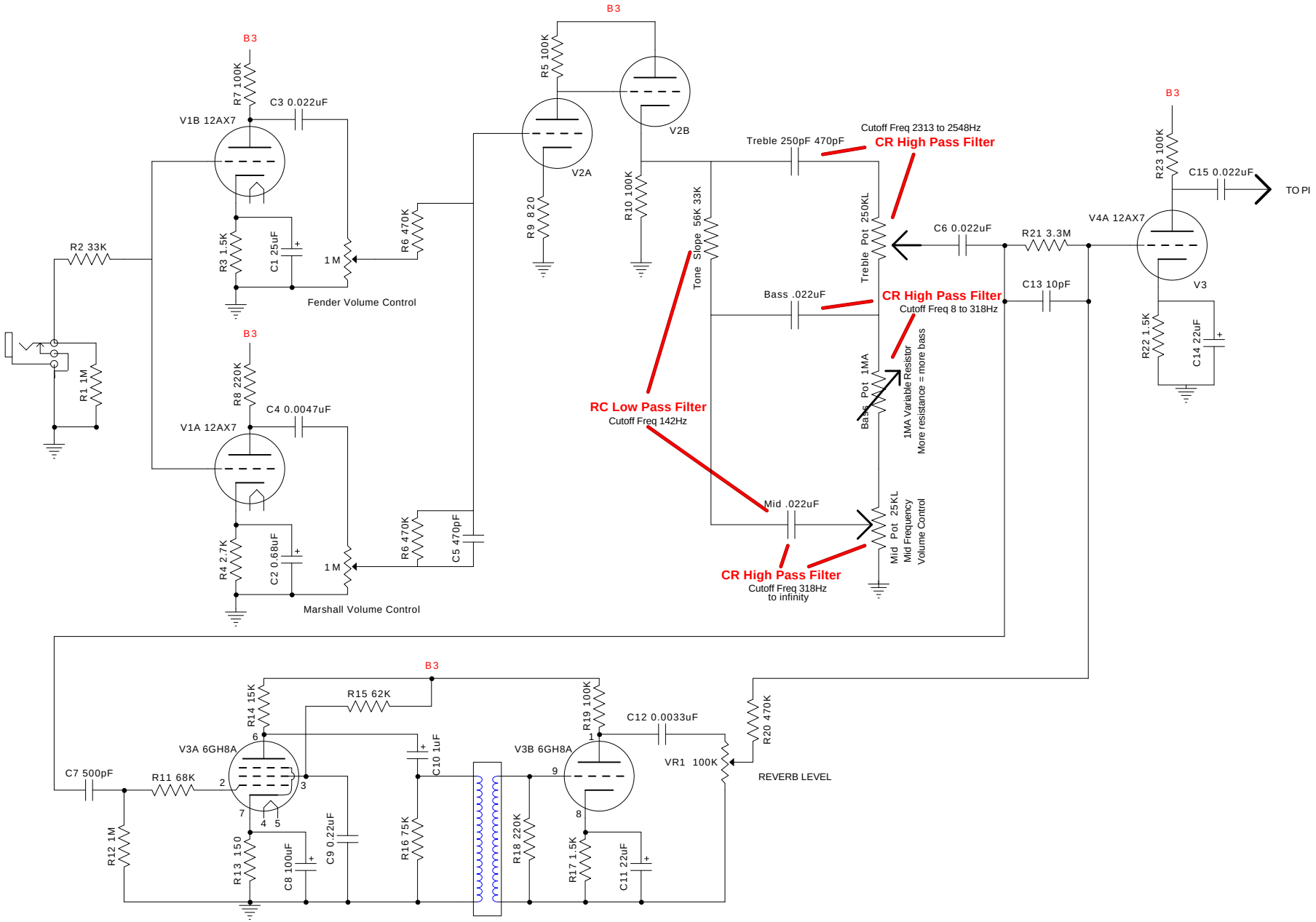
B3
R7 100K
C3 0.022uF
V1B 12AX7
R3 1.5K
C1 25uF
1 M
R6 470K
Fender Volume Control
R2 33K
R1 1M
R8 220K
C4 0.0047uF
V1A 12AX7
R4 2.7K
C2 0.68uF
1 M
R6 470K
C5 470pF
Marshall Volume Control
R5 100K
V2A
V2B
R9 820
R10 100K
Tone Slope 56K 33K
Treble 250pF 470pF
Cutoff Freq 2313 to 2548Hz
CR High Pass Filter
Treble Pot 250KL
C6 0.022uF
R21 3.3M
C13 10pF
Bass .022uF
CR High Pass Filter
Cutoff Freq 8 to 318Hz
Bass Pot 1MA
1MA Variable Resistor
More resistance = more bass
RC Low Pass Filter
Cutoff Freq 142Hz
Mid .022uF
Mid Pot 25KL
Mid Frequency
Volume Control
CR High Pass Filter
Cutoff Freq 318Hz
to infinity
R23 100K
C15 0.022uF
TO PI
V4A 12AX7
V3
R22 1.5K
C14 22uF
R14 15K
R15 62K
V3A 6GH8A
C7 500pF
R11 68K
R12 1M
R13 150
C8 100uF
C9 0.22uF
C10 1uF
R16 75K
R18 220K
R19 100K
C12 0.0033uF
V3B 6GH8A
VR1 100K
R20 470K
REVERB LEVEL
R17 1.5K
C11 22uF