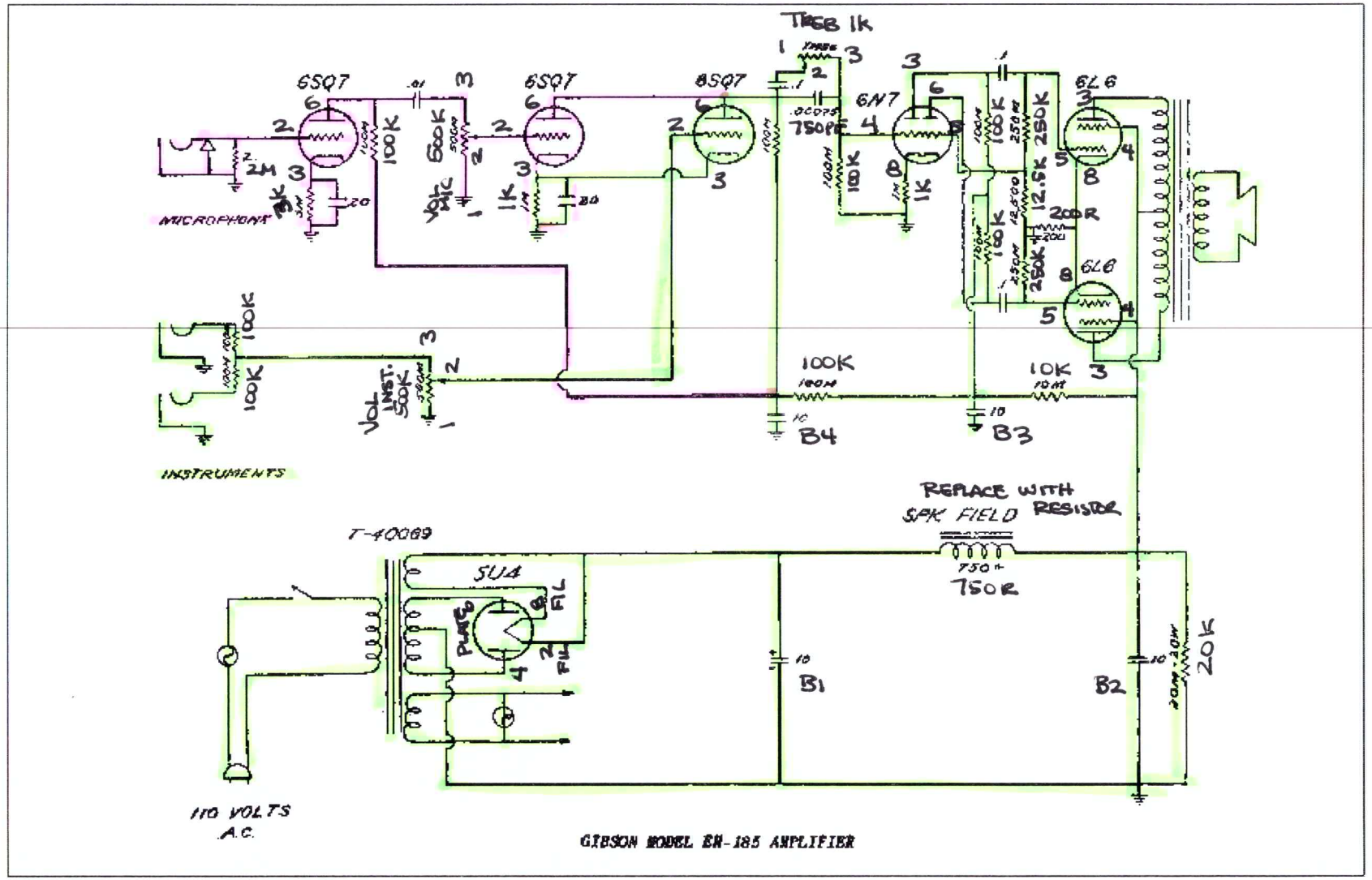

GIBSON MODEL EH-185 AMPLIFIER