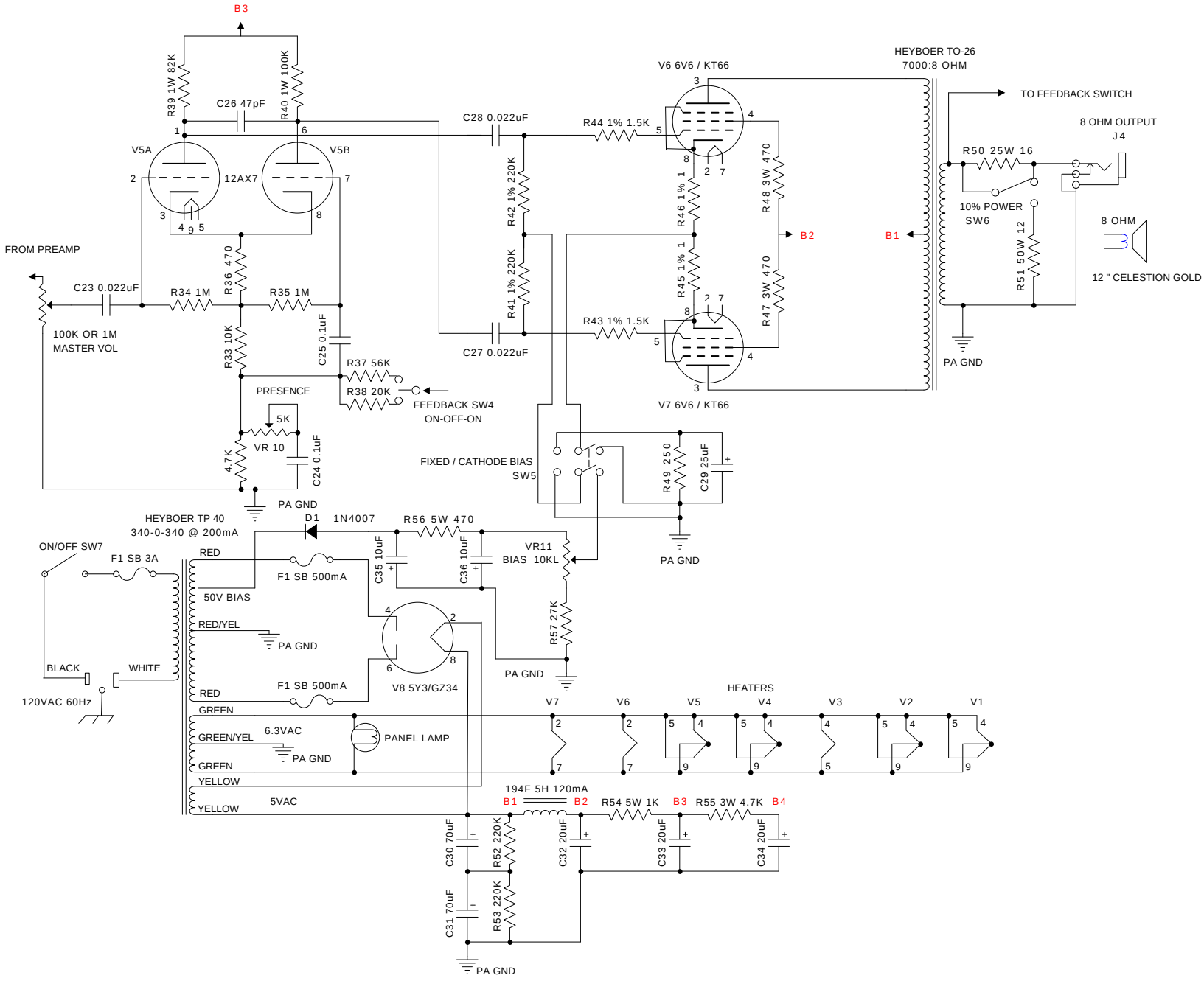

MR. C-VERB SL	
PI, POWER AMP, AND POWER SUPPLY	
SWAMPERTECH AMPLIFIERS	RED HILL, ALABAMA