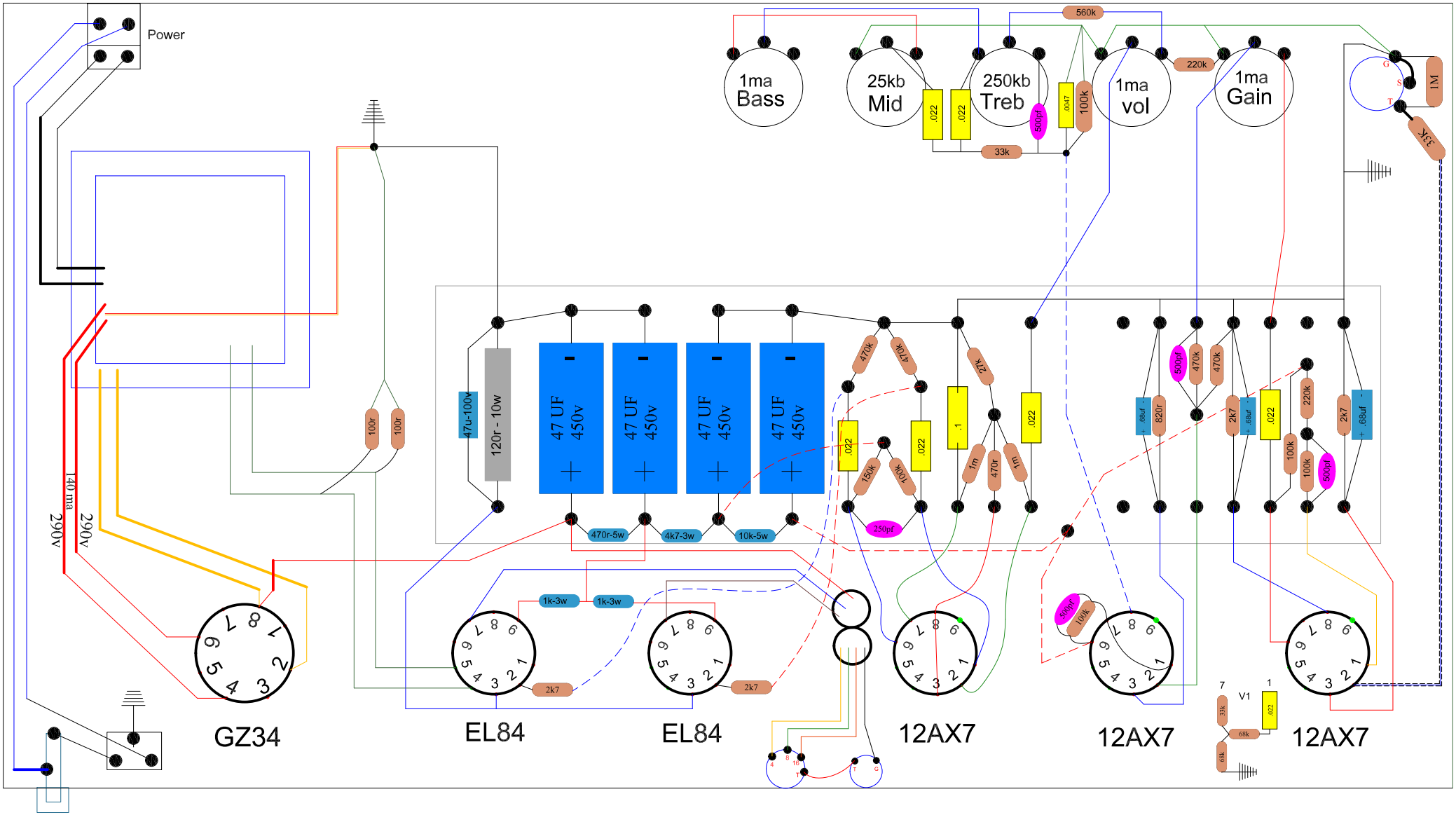
Power
1ma
Bass
25kb
Mid
250kb
Treb
1ma
vol
1ma
Gain
560k
220k
33k
.022
.022
500pf
.0047
100k
1M
33k
G
S
T
47u-100v
120r - 10w
47 UF
450v
47 UF
450v
47 UF
450v
47 UF
450v
470k
470k
.022
.022
750k
100k
250pf
2k7
.1
1m
470r
1m
.022
500pf
470k
470k
68uf
820r
2k7
68uf
.022
220k
100k
100k
500pf
2k7
68uf
100r
100r
140 ma
290v
290v
470r-5w
4k7-3w
10k-5w
1k-3w
1k-3w
2k7
2k7
500pf
100k
7
V1
1
33k
68k
68k
.022
GZ34
EL84
EL84
12AX7
12AX7
12AX7