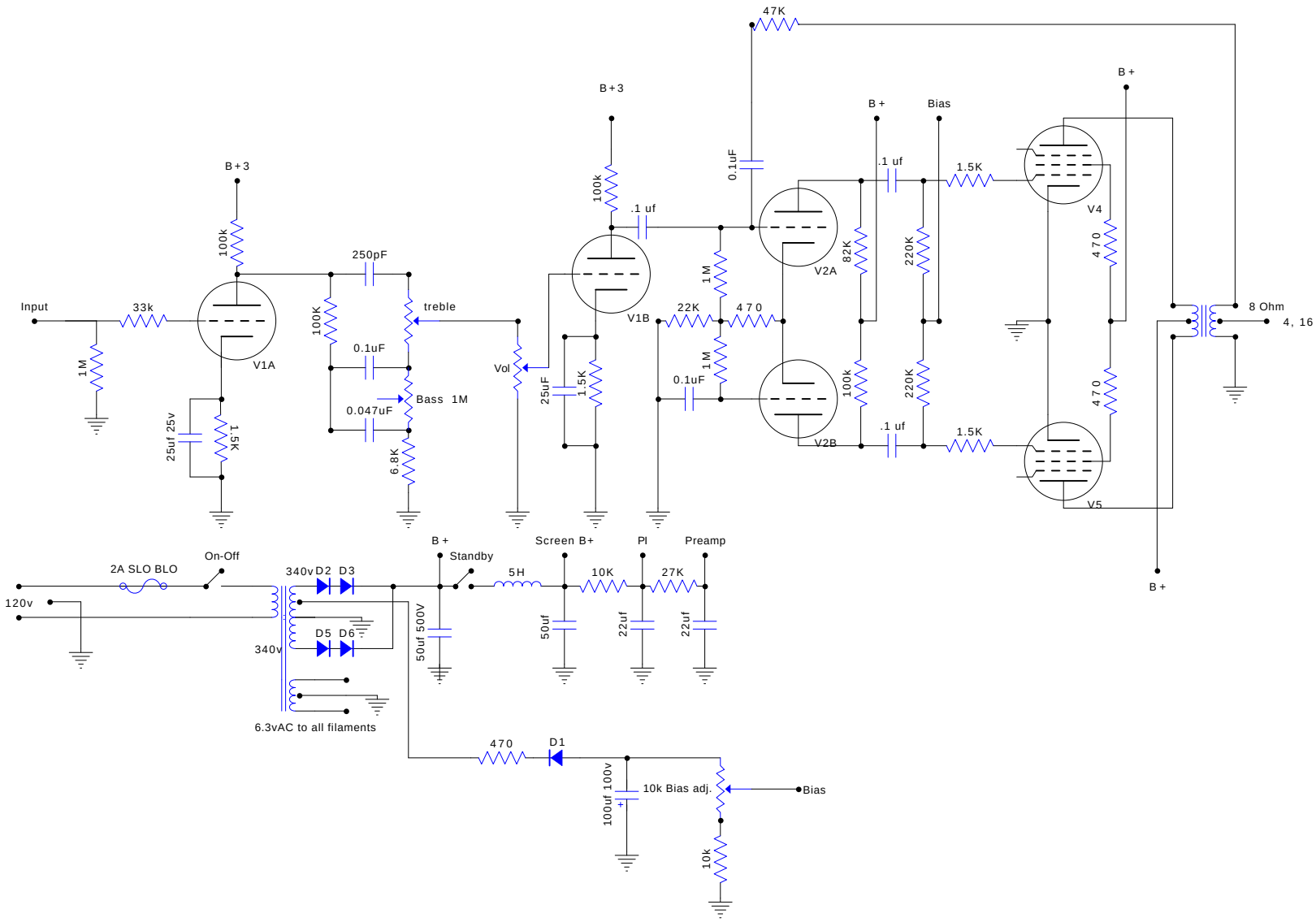
47K
B+3
B+
Bias
B+
B+3
100k
.1 uf
0.1uF
.1 uf
1.5K
V4
100k
250pF
82K
220K
470
1M
V2A
Input
33k
treble
22K
470
8 Ohm
4, 16
100K
V1B
1M
V1A
0.1uF
Vol
25uF
1.5K
0.1uF
100k
220K
470
Bass 1M
1M
25uf 25v
1.5K
0.047uF
V2B
.1 uf
1.5K
6.8K
V5
B+
B+
Standby
Screen B+
Pl
Preamp
On-Off
2A SLO BLO
340v
D2
D3
5H
10K
27K
120v
50uf 500v
50uf
22uf
22uf
D5
D6
340v
6.3vAC to all filaments
470
D1
100uf 100v
10k Bias adj.
Bias
10k