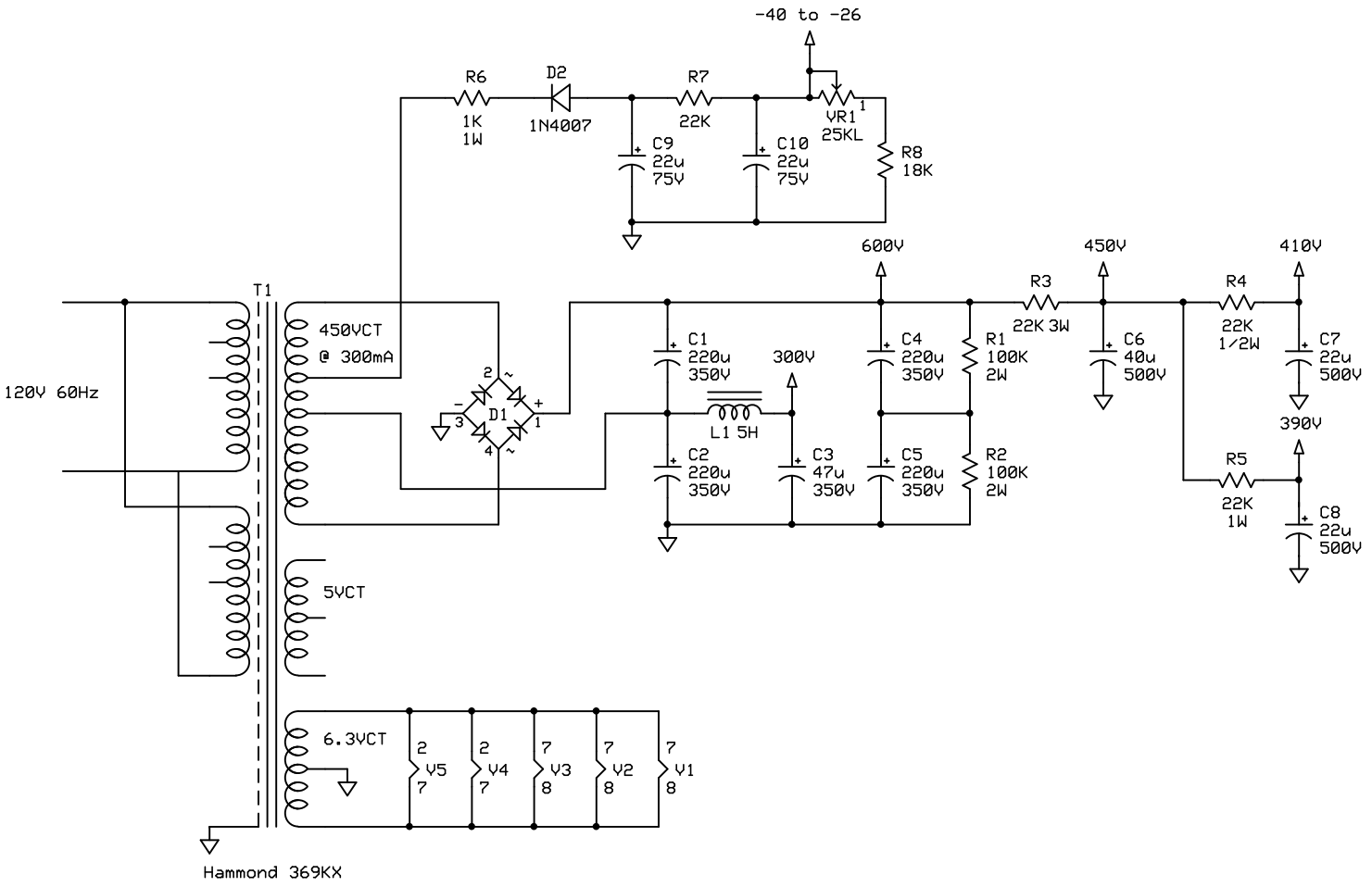

Forum Amps		
B15n 100W PS - Hammond 369KX		
Pete	Rev 1.0 5/6/2019	Page # or name