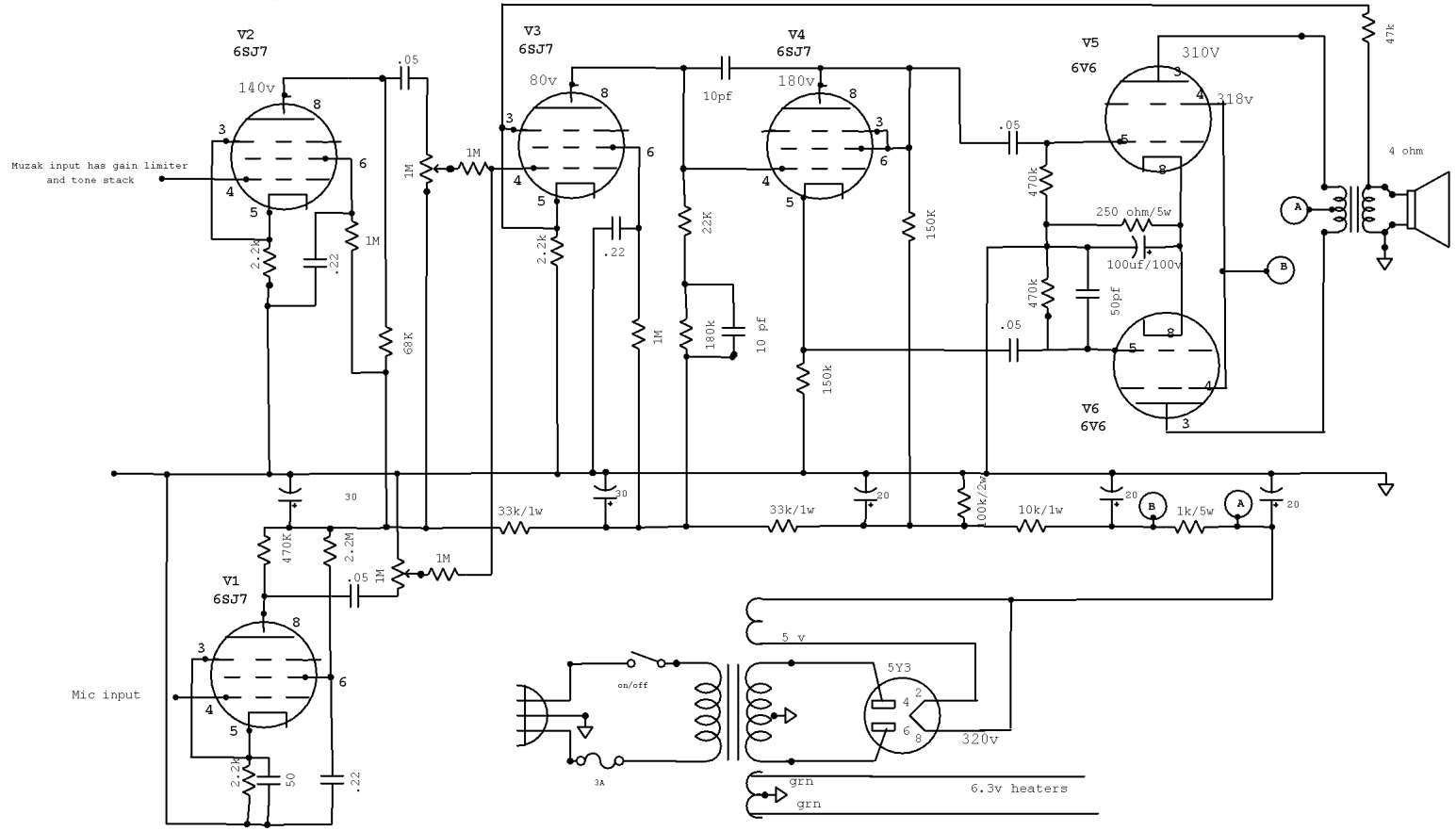Muzak 908B Stromberg Carlson