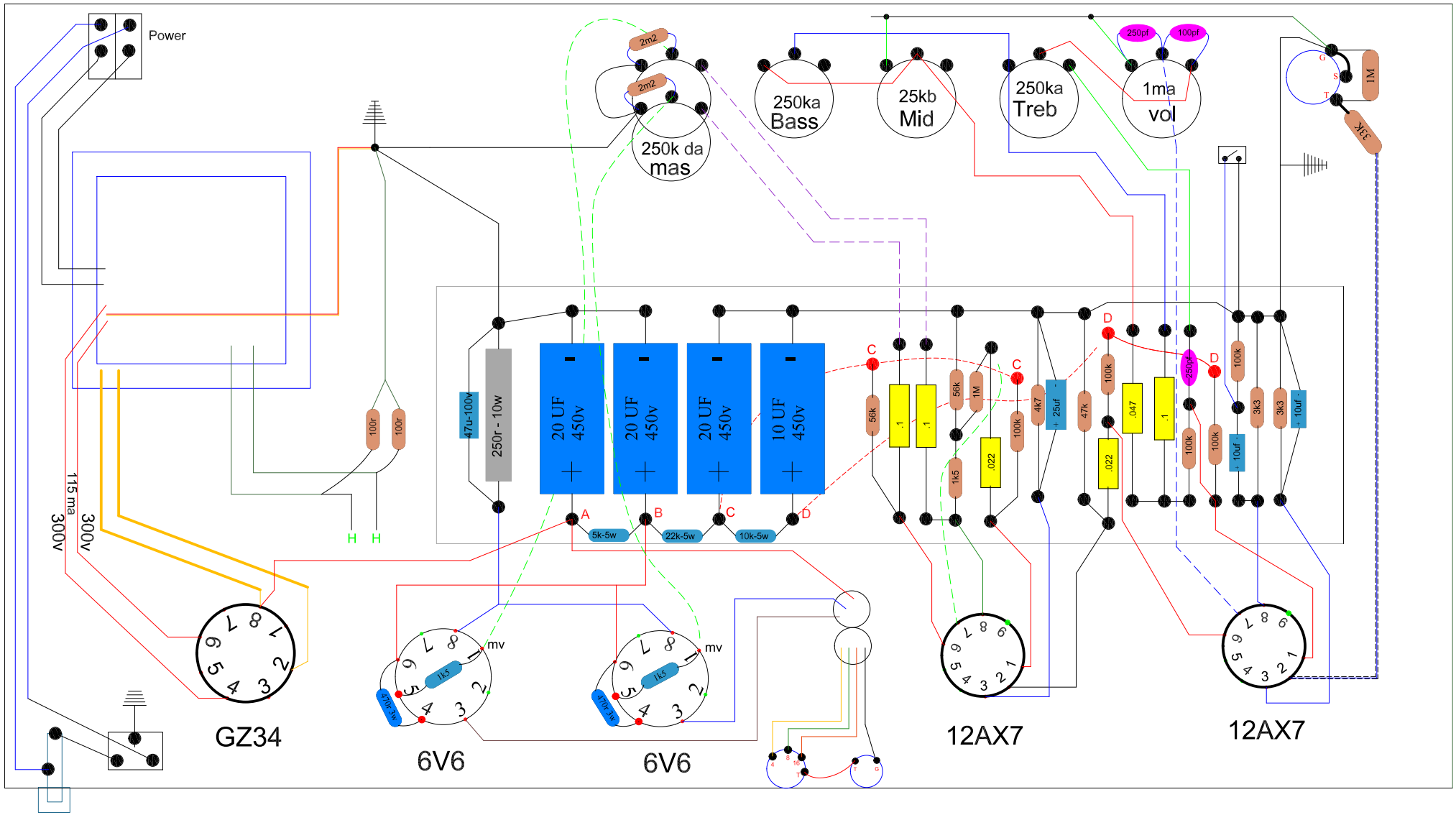
Power
2m2
2m2
250k da mas
250ka Bass
25kb Mid
250ka Treb
250pf
100pf
1ma vol
1M
35k
47u-100v
250r - 10w
20 UF 450v
20 UF 450v
20 UF 450v
10 UF 450v
5k-5w
22k-5w
10k-5w
100r
100r
H H
115 ma
300v
300v
GZ34
6V6
6V6
mv
mv
1k5
470r-5w
12AX7
12AX7
56k
.1
.1
56k
1M
1k5
.022
100k
4k7
25uf
47k
100k
.047
.022
.1
250pf
100k
100k
100k
10uf
3k3
3k3
10uf