Dual Lite

Vox AC-15 Lite plus 18W Lite IIB

Drawn By Steve Luckey 02/16/2015

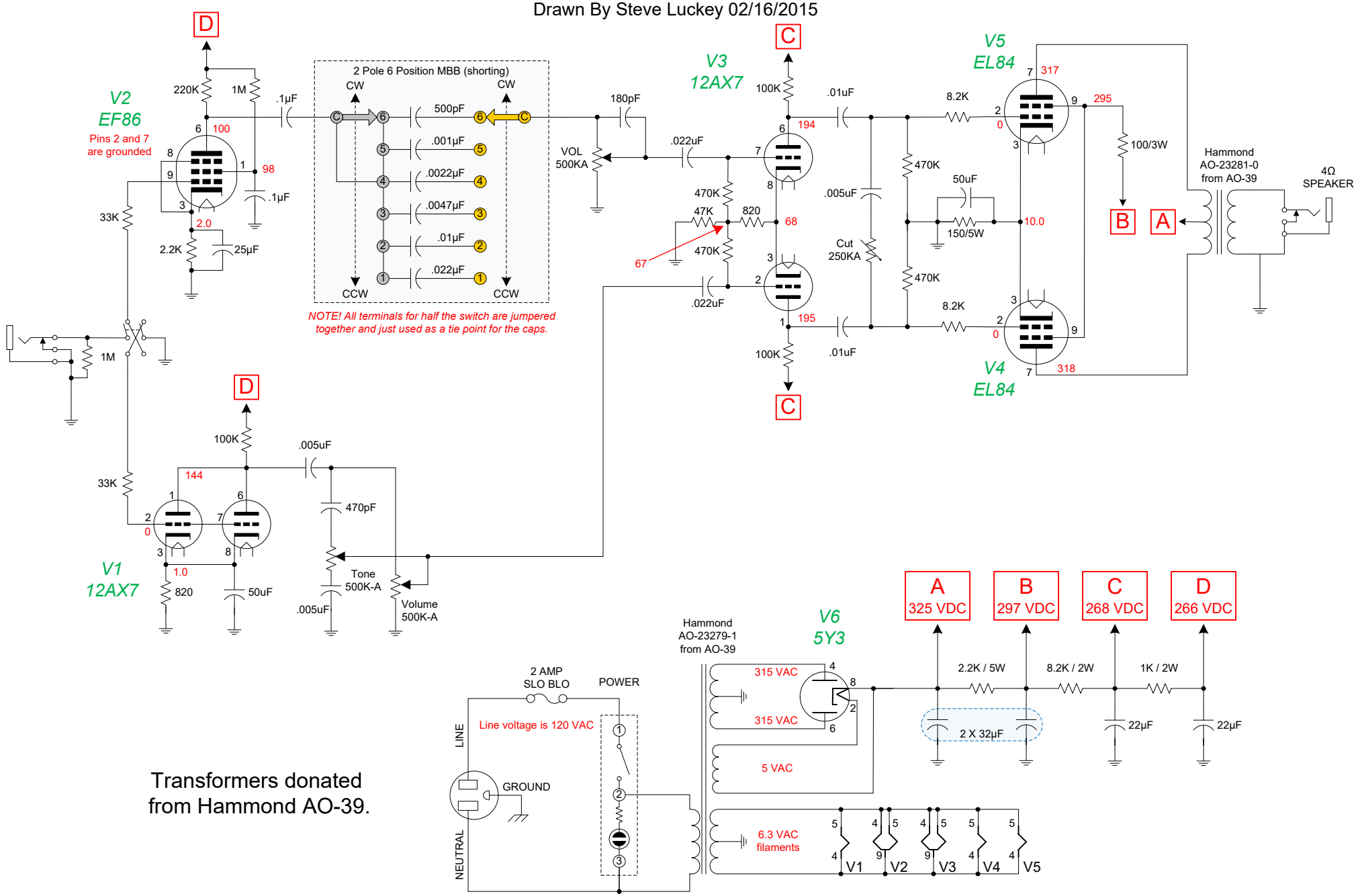

Transformers donated
from Hammond AO-39.