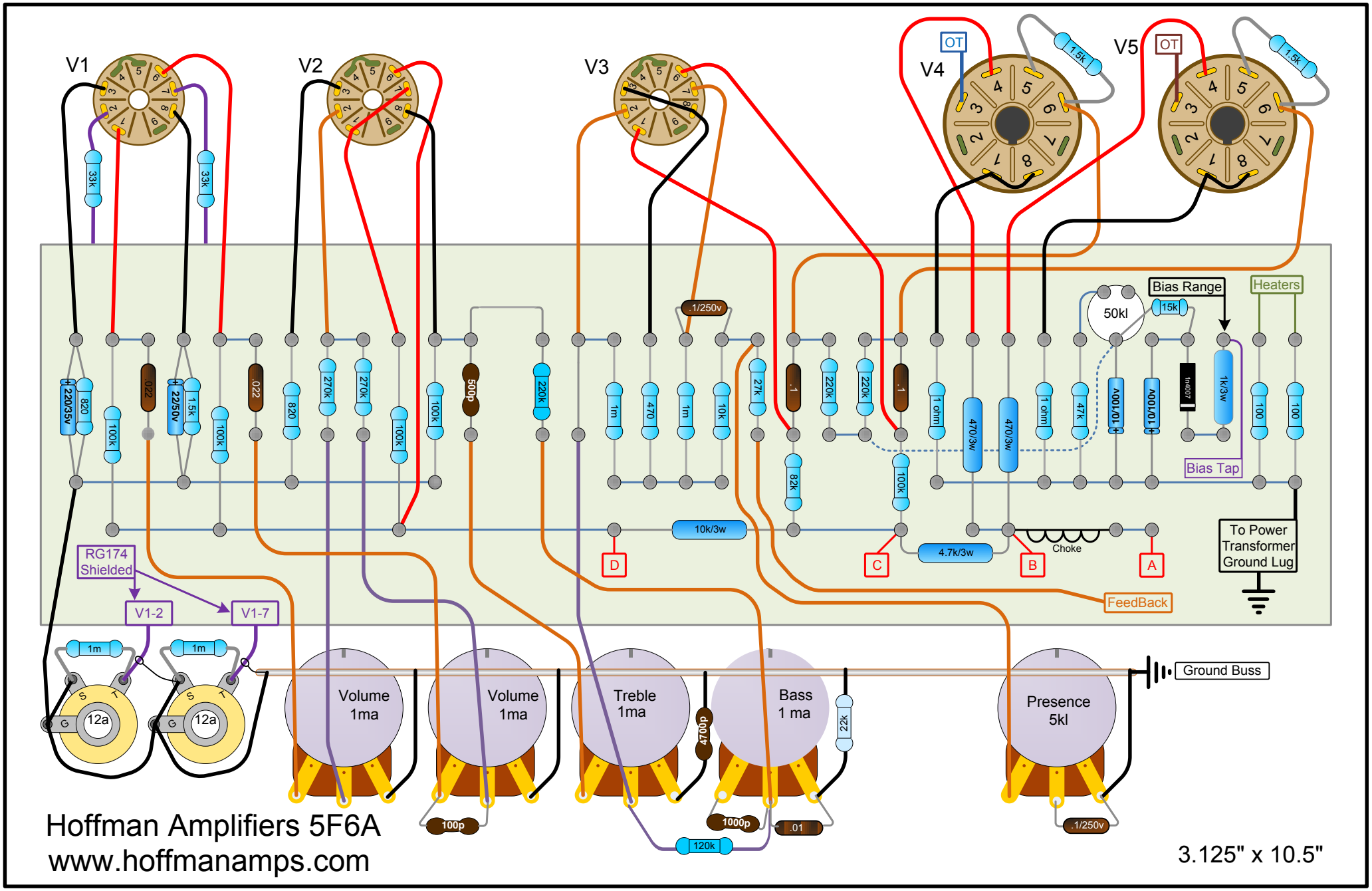

Hoffman Amplifiers 5F6A
www.hoffmanamps.com

3.125" x 10.5"